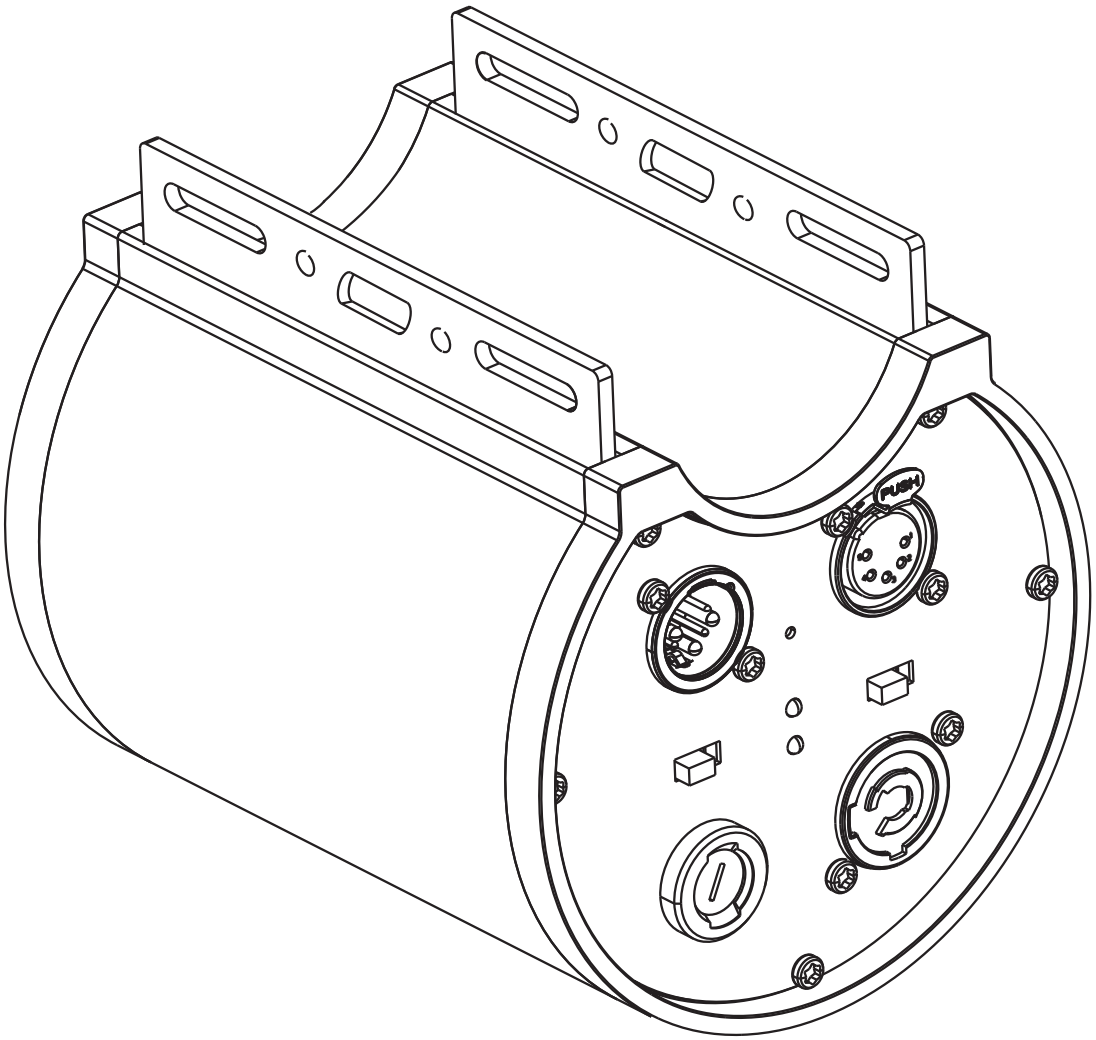

DATA DISTRO 6

User Manual

©2023 ADJ Products, LLC all rights reserved. Information, specifications, diagrams, images, and instructions herein are subject to change without notice. ADJ Products, LLC logo and identifying product names and numbers herein are trademarks of ADJ Products, LLC. Copyright protection claimed includes all forms and matters of copyrightable materials and information now allowed by statutory or judicial law or hereinafter granted. Product names used in this document may be trademarks or registered trademarks of their respective companies and are hereby acknowledged. All non-ADJ Products, LLC brands and product names are trademarks or registered trademarks of their respective companies.

ADJ Products, LLC and all affiliated companies hereby disclaim any and all liabilities for property, equipment, building, and electrical damages, injuries to any persons, and direct or indirect economic loss associated with the use or reliance of any information contained within this document, and/or as a result of the improper, unsafe, insufficient and negligent assembly, installation, rigging, and operation of this product.

ADJ PRODUCTS LLC World Headquarters
6122 S. Eastern Ave. I Los Angeles, CA 90040 USA
Tel: 800-322-6337 I Fax: 323-582-2941 I www.adj.com Isupport@adj.com

ADJ Supply Europe B.V.
Junostraat 2 I 6468 EW Kerkrade I Netherlands
Tel: +31 45 546 85 00 I Fax: +31 45 546 85 99 I www.adj.eu I service@adj.eu

Europe Energy Saving Notice
Energy Saving Matters (EuP 2009/125/EC)
Saving electric energy is a key to help protecting the environment. Please turn off all electrical products when they are not in use. To avoid power consumption in idle mode, disconnect all electrical equipment from power when not in use. Thank you!

DOCUMENT VERSION

Due to additional product features and/or enhancements, an updated version of this document may be available online.
Please check www.adj.com for the latest revision/update of this manual before beginning installation and/or programming.

Date	Document Version	Software Version >	DMX Channel Mode	Notes
12/14/23	1.0	N/A	N/A	Initial Release

CONTENTS

General Information	4
Limited Warranty (USA Only)	5
Warranty Registration I Features	6
Safety Guidelines	7
Overview	9
Installation	10
Remote Device Management (RDM)	13
Operation	14
Cleaning and Maintenance I Ordering Information	15
Specifications	16
Dimensional Drawings	17
FCC Statement	18

GENERAL INFORMATION

INTRODUCTION
Please read and understand all instructions in this manual carefully and thoroughly before attempting to operate these products. These instructions contain important safety and use information.

UNPACKING
This device has been thoroughly tested and has been shipped in perfect operating condition. Carefully check the shipping carton for damage that may have occurred during shipping. If the carton appears to be damaged, carefully inspect the device for damage and be sure all accessories necessary to operate the device have arrived intact. In the event damage has been found or parts are missing, please contact our customer support team for further instructions. Please do not return this device to your dealer without first contacting customer support at the number listed below. Please do not discard the shipping carton in the trash. Please recycle whenever possible.

CUSTOMER SUPPORT
Contact ADJ Service for any product related service and support needs. Also visit **forums.adj.com** with questions, comments or suggestions.

Parts: To purchase parts online visit:
http://parts.adj.com (US)
http://www.adjparts.eu (EU)

ADJ SERVICE USA - Monday - Friday 8:00am to 4:30pm PST
Voice: 800-322-6337 | Fax: 323-582-2941 | support@adj.com

ADJ SERVICE EUROPE - Monday - Friday 08:30 to 17:00 CET
Voice: +31 45 546 85 60 | Fax: +31 45 546 85 96 | support@adj.eu

ADJ PRODUCTS LLC USA
6122 S. Eastern Ave. Los Angeles, CA. 90040
323-582-2650 | Fax 323-532-2941 | www.adj.com | info@adj.com

ADJ SUPPLY Europe B.V
Junostraat 2 6468 EW Kerkrade, The Netherlands
+31 (0)45 546 85 00 | Fax +31 45 546 85 99
www.adj.eu | info@adj.eu

ADJ PRODUCTS GROUP Mexico
AV Santa Ana 30 Parque Industrial Lerma, Lerma, Mexico 52000
+52 (728) 282-7070

WARNING! To prevent or reduce the risk of electrical shock or fire, do not expose this unit to rain or moisture!

CAUTION! There are no user serviceable parts inside this unit. Do not attempt any repairs yourself, as doing so will void your manufacturer's warranty. Damages resulting from modifications to this device and/or the disregard of safety instructions and guidelines in this manual void the manufacturer's warranty claims and are not subject to any warranty claims and/or repairs.

Do not discard the shipping cartoon in the trash. Please recycle when ever possible.

LIMITED WARRANTY (USA ONLY)

A. ADJ Products, LLC hereby warrants, to the original purchaser, ADJ Products, LLC products to be free of manufacturing defects in material and workmanship for a prescribed period from the date of purchase (see specific warranty period on reverse). This warranty shall be valid only if the product is purchased within the United States of America, including possessions and territories. It is the owner's responsibility to establish the date and place of purchase by acceptable evidence, at the time service is sought.

B. For warranty service, you must obtain a Return Authorization number (RA#) before sending back the product-please contact ADJ Products, LLC Service Department at 800-322-6337. Send the product only to the ADJ Products, LLC factory. All shipping charges must be pre-paid. If the requested repairs or service (including parts replacement) are within the terms of this warranty, ADJ Products, LLC will pay return shipping charges only to a designated point within the United States. If the entire instrument is sent, it must be shipped in its original package. No accessories should be shipped with the product. If any accessories are shipped with the product, ADJ Products, LLC shall have no liability whatsoever for loss of or damage to any such accessories, or for the safe return thereof.

C. This warranty is void of the serial number has been altered or removed; if the product is modified in any manner which ADJ Products, LLC concludes, after inspection, affects the reliability of the product, if the product has been repaired or service by anyone other than ADJ Products, LLC factory unless prior written authorization was issued to purchaser by ADJ Products, LLC; if the product is damaged because not properly maintained as set forth in the instruction manual.

D. This is not a service contact, and this warranty does not include maintenance, cleaning or periodic check up. During the period specified above, ADJ Products, LLC will replace defective parts at its expense with new or refurbished parts, and will absorb all expenses for warrant service and repair labor by reason of defects in material or workmanship. The sole responsibility of ADJ Products, LLC under this warranty shall be limited to the repair of the product, or replacement thereof, including parts, at the sole discretion of ADJ Products, LLC. All products covered by this warranty were manufactured after August 15, 2012, and bear identifying marks to that effect.

E. ADJ Products, LLC reserves the right to make changes in design and/or improvements upon its products without any obligation to include these changes in any products theretofore manufactured.

F. No warranty, whether expressed or implied, is given or made with respect to any accessory supplied with products described above. Except to the extent prohibited by applicable law, all implied warranties made by ADJ Products, LLC in connection with this product, including warranties of merchantability or fitness, are limited in duration to the warranty period set forth above. And no warranties, whether expressed or implied, including warranties of merchantability or fitness, shall apply to this product after said period has expired. The consumer's and/or Dealer's sole remedy shall be such repair or replacement as is expressly provided above; and under no circumstances shall ADJ Products, LLC be liable for any loss or damage, direct or consequential, arising out of the use of, or inability to use, this product.

G. This warranty is the only written warranty applicable to ADJ Products, LLC Products and supersedes all prior warranties and written descriptions of warranty terms and conditions heretofore published.

LIMITED WARRANTY PERIODS

- **Non L.E.D. Lighting Products = 1-year (365 days) Limited Warranty** (Such as: Special Effect Lighting, Intelligent Lighting, UV lighting, Strobes, Fog Machines, Bubble Machines, Mirror Balls, Par Cans, Trussing, Lighting Stands etc. excluding LED and lamps)
- **Laser Products = 1 Year (365 Days) Limited Warranty** (excludes laser diodes which have 6 month limited warranty)
- **L.E.D. Products = 2-year (730 days) Limited Warranty** (excluding batteries which have a 180 day limited warranty) Note: 2 Year Warranty only applies to purchases within the United States.
- **StarTec Series = 1 Year Limited Warranty** (excluding batteries which have a 180 day limited warranty)
- **ADJ DMX Controllers = 2 Year (730 Days) Limited Warranty**

WARRANTY REGISTRATION

This device carries a 2 year limited warranty. Please fill out the enclosed warranty card to validate your purchase. All returned service items, whether under warranty or not, must be freight pre-paid and accompanied by a return authorization (R.A.) number. The R.A. number must be clearly written on the outside of the return package. A brief description of the problem as well as the R.A. number must also be written down on a piece of paper included in the shipping carton. If the unit is under warranty, you must provide a copy of your proof of purchase invoice. You may obtain an R.A. number by contacting our customer support team on our customer support number. All packages returned to the service department not displaying an R.A. number on the outside of the package will be returned to the shipper.

FEATURES

- DMX512 and RDM Protocol Switch
- 6x Electrically Isolated Output Ports
- 1 Way Signal Input
- 1 Signal Direct Output
- Buffering, Amplification, and Division of DMX/RDM signals

INCLUDED ITEMS

- Power Cord (x1)
- Clamp Mount Bracket (x1)
- Mounting Straps (x2)

SAFETY GUIDELINES

To guarantee a smooth operation, it is important to follow all instructions and guidelines in this manual. ADJ Products, LLC is not responsible for injury and/or damages resulting from the misuse of this device due to the disregard of the information printed in this manual. Only qualified and/or certified personnel should perform installation of this device and only the original rigging parts included with this device should be used for installation. Any modifications to the device and/or the included mounting hardware will void the original manufacturer's warranty and increase the risk of damage and/or personal injury.

PROTECTION CLASS 1 - FIXTURE MUST BE PROPERLY GROUNDED

THERE ARE NO USER SERVICEABLE PARTS INSIDE THIS UNIT. DO NOT ATTEMPT ANY REPAIRS YOURSELF, AS DOING SO WILL VOID YOUR MANUFACTURER'S WARRANTY. DAMAGES RESULTING FROM MODIFICATIONS TO THIS DEVICE AND/OR THE DISREGARD OF SAFETY INSTRUCTIONS AND GUIDELINES IN THIS MANUAL VOID THE MANUFACTURER'S WARRANTY AND ARE NOT SUBJECT TO ANY WARRANTY CLAIMS AND/OR REPAIRS.

DO NOT PLUG DEVICE INTO A DIMMER PACK!
NEVER OPEN THIS DEVICE WHILE IN USE!
UNPLUG POWER BEFORE SERVICING DEVICE!
MAXIMUM AMBIENT OPERATING TEMPERATURE IS 113°F (45°C). DO NOT OPERATE WHEN AMBIENT TEMPERATURE EXCEEDS THIS VALUE!
KEEP FLAMMABLE MATERIALS AWAY FROM FIXTURE!

IF THE FIXTURE IS EXPOSED TO ENVIRONMENTAL TEMPERATURE CHANGES SUCH AS RELOCATION FROM AN OUTDOOR COLD TO AN INDOOR WARM ENVIRONMENT, DO NOT POWER THE FIXTURE ON IMMEDIATELY. INTERNAL CONDENSATION AS A RESULT OF ENVIRONMENTAL TEMPERATURE CHANGE CAN CAUSE INTERNAL FIXTURE DAMAGE. LEAVE THE FIXTURE POWERED OFF UNTIL IT HAS REACHED ROOM TEMPERATURE BEFORE POWERING ON.

SAFETY GUIDELINES

- For your own personal safety, please read and understand this manual in its entirety before attempting to install or operate this device.
- Save the packing carton for use in the unlikely event the device may have to be returned for service.
- Do not spill water or other liquids into or on to the device.
- Be sure that the local power outlet matches the required voltage for the device
- Do not remove the outer casing of the device for any reason. There are no user serviceable parts inside.
- Disconnect the device's main power when left unused for long periods of time.
- Never connect this device to a dimmer pack
- Do not attempt to operate this device if it has been damaged in any way.
- Never operate this device with the cover removed.
- To reduce the risk of electrical shock or fire, do not expose this device to rain or moisture.
- Do not attempt to operate this device if the power cord has been frayed or broken.
- Do not attempt to remove or break off the ground prong from the electrical cord. This prong is used to reduce the risk of electrical shock and fire in case of an internal short.
- Disconnect from main power before making any type of connection.
- Never block the ventilation holes. Always be sure to mount this device in an area that will allow proper ventilation. Allow about 6" (15cm) between this device and a wall.
- This unit is intended for indoor use only. Use of this product outdoors voids all warranties.
- Always mount this unit in a safe and stable matter.
- Please route your power cord out of the way of foot traffic. Power cords should be routed so they are not likely to be walked on, or pinched by items placed upon or against them.
- Maximum ambient operating temperature is **113°F (45°C).** Do not operate this device when ambient temperature exceeds this value!
- Keep flammable materials away from this fixture!
- The device should be serviced by qualified service personnel when:
  A. The power-supply cord or the plug has been damaged.
  B. Objects have fallen on, or liquid has been spilled into, the device.
  C. The device has been exposed to rain or water.
  D. The appliance does not appear to operate normally or exhibits a marked change in performance.

OVERVIEW

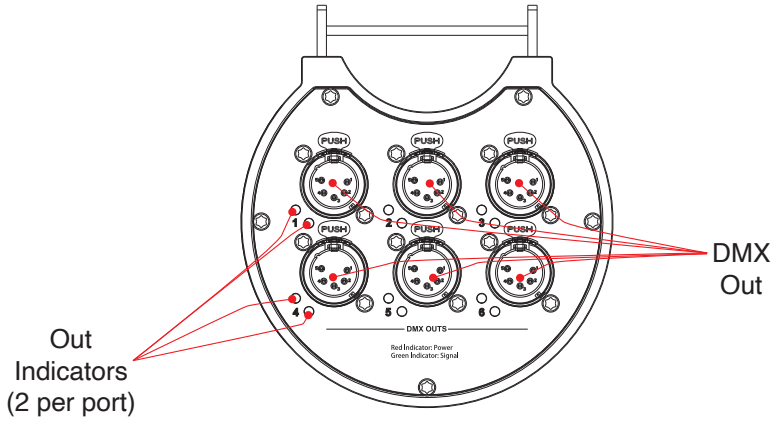
PUSH
1
2
3
4
5
6
DMX OUTS
Red Indicator: Power
Green Indicator: Signal
DMX Out
Out Indicators (2 per port)

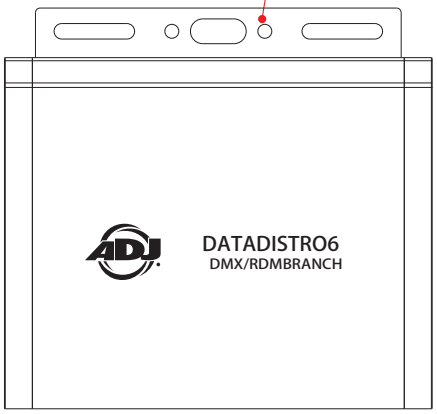
Strap Mounting Bracket
DATADISTRO6
DMX/RDMBRANCH

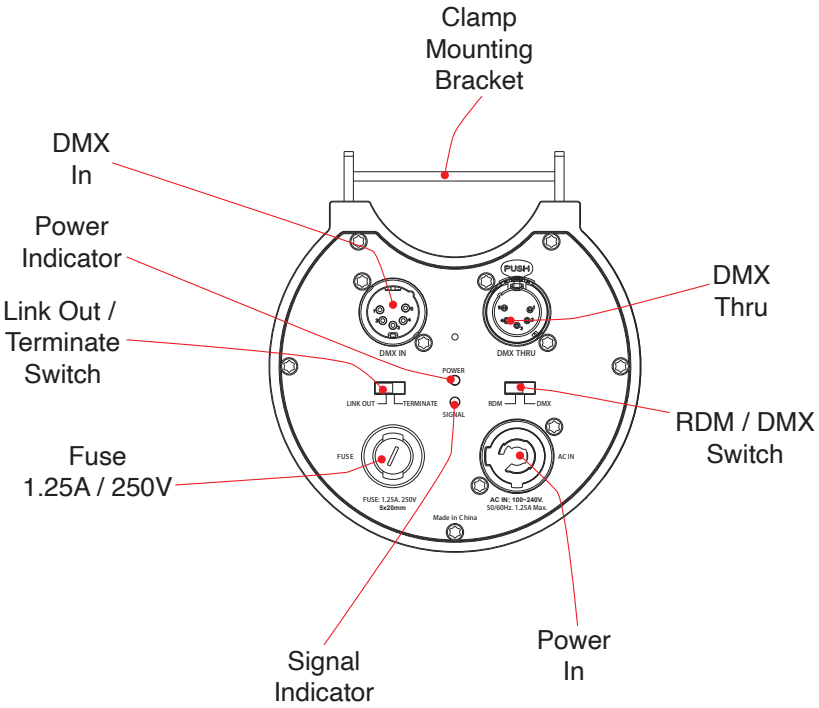
Clamp Mounting Bracket
DMX In
Power Indicator
Link Out / Terminate Switch
Fuse 1.25A / 250V
DMX Thru
RDM / DMX Switch
Signal Indicator
Power In
PUSH
DMX IN
DMX THRU
POWER
LINK OUT
TERMINATE
SIGNAL
RDM
DMX
FUSE
AC IN
FUSE: 1.25A, 250V 5x20mm
AC IN: 100~240V, 50/60Hz, 1.25A Max.
Made in China

INSTALLATION

FLAMMABLE MATERIAL WARNING
Keep device at least 8in. (0.2m) away from any flammable materials, decorations, pyrotechnics, etc.

ELECTRICAL CONNECTIONS
A qualified electrician should be used for all electrical connections and/or installations.

MINIMUM DISTANCE TO OBJECTS/SURFACES MUST BE 40 FEET (12 METERS)

DO NOT INSTALL THE DEVICE IF YOU ARE NOT QUALIFIED TO DO SO!

When installing the unit, the trussing or area of installation must be able to support at least 10 times the weight of the unit and any attached accessories without any deformation. The unit must be secured with a secondary safety attachment, e.g. an appropriately-rated safety cable.

Before rigging/mounting the device to any metal truss/structure or placing the device on any surface, a professional equipment installer MUST be consulted to determine if the metal truss/structure or surface is properly certified to safely hold the combined weight of the device, clamps, cables, and accessories.

Maximum ambient operating temperature is ***113°F (45°C).***

Device should be installed away from walking paths, seating areas, or areas where unauthorized personnel might reach the fixture by hand.

NEVER stand directly below the device when rigging, removing, or servicing.

Overhead installation must always be secured with a secondary safety attachment, such as an appropriately rated safety cable that can hold 10 times the weight of the device.

Overhead mounting requires extensive experience, including calculating working load limits, knowledge of installation material being used, and perodic safety inspection of all installation material as well as the unit itself. If you lack these qualifications, do not attempt the installation yourself.

The installaiton should be checked by a skilled person once a year.

INSTALLATION

CLAMP MOUNTING

This device can be mounted directly to a mounting clamp. To do so, install a mounting clamp of the appropriate weight rating by inserting an M10 bolt through the hole in the mounting clamp and the hole in the clamp mounting bracket, then secure the clamp in place with the matching washer and nut. Finally, attach a separate **SAFETY CABLE** of the appropriate weight rating by running the safety cable through one of the strap mounting bracket slots and looping it over the truss.

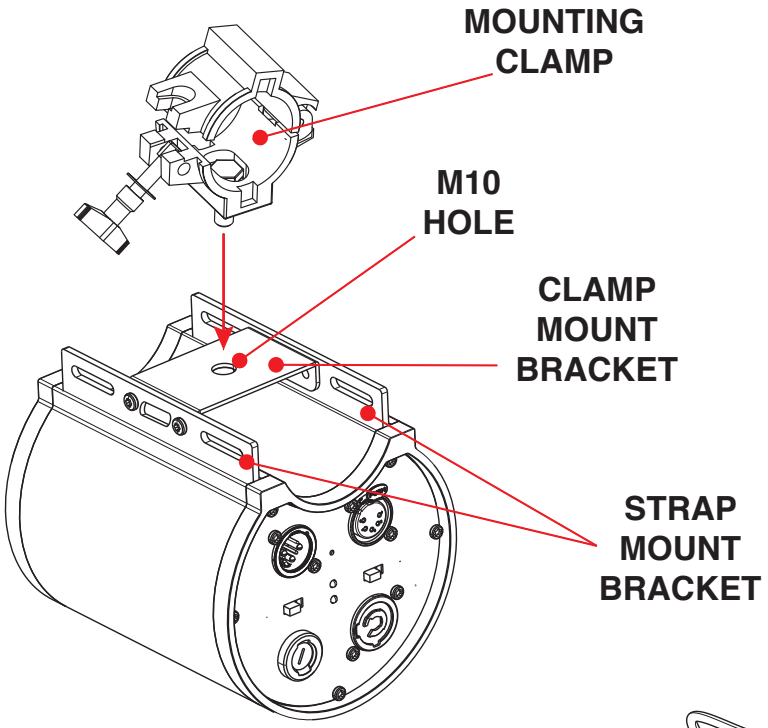

SAFETY CABLE:

ALWAYS ATTACH A SAFETY CABLE WHENEVER INSTALLING THIS FIXTURE IN A SUSPENDED ENVIRONMENT TO ENSURE THAT THE FIXTURE WILL NOT FALL IF THE CLAMP FAILS.

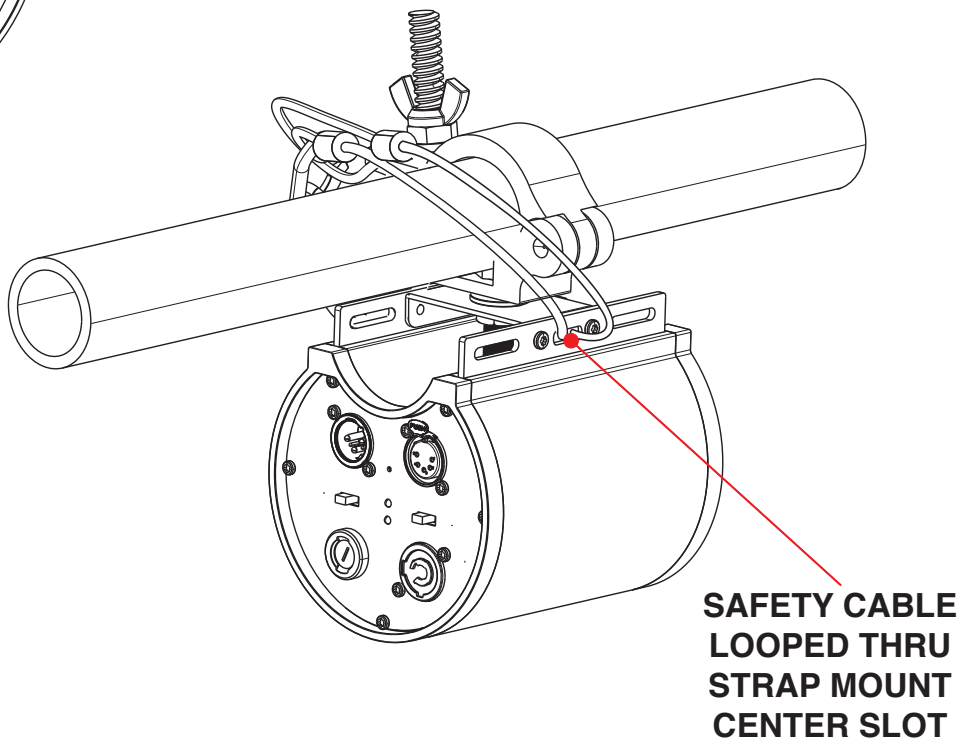

INSTALLATION

STRAP MOUNTING

This device can be mounted directly to a truss using the strap mounting brackets on the top of the device. To do so, remove the clamp mount bracket, then press the top of the device against the truss beam so that the truss beam fits securely into the semi-circular channel on the top of the device. Insert one of the included mounting straps into one of the thin slots on one of the strap mounting brackets, pass it over the truss beam, and then insert it into the thin slot in the strap mounting bracket on the opposite side. The strap should create a loop that passes over the top of the truss beam. Repeat this process with the second strap, as well. ***Please note that this device requires the use of BOTH mounting straps for secure installation.*** The strap loops should be loose at this point to allow the installation of the safety cable.

Attach a separate **SAFETY CABLE** of the appropriate weight rating by running the safety cable through the center slot in one of the strap mounting brackets, then guide it upwards between the truss member and the inside of the bracket. Finally, tighten the straps to secure the device in place.

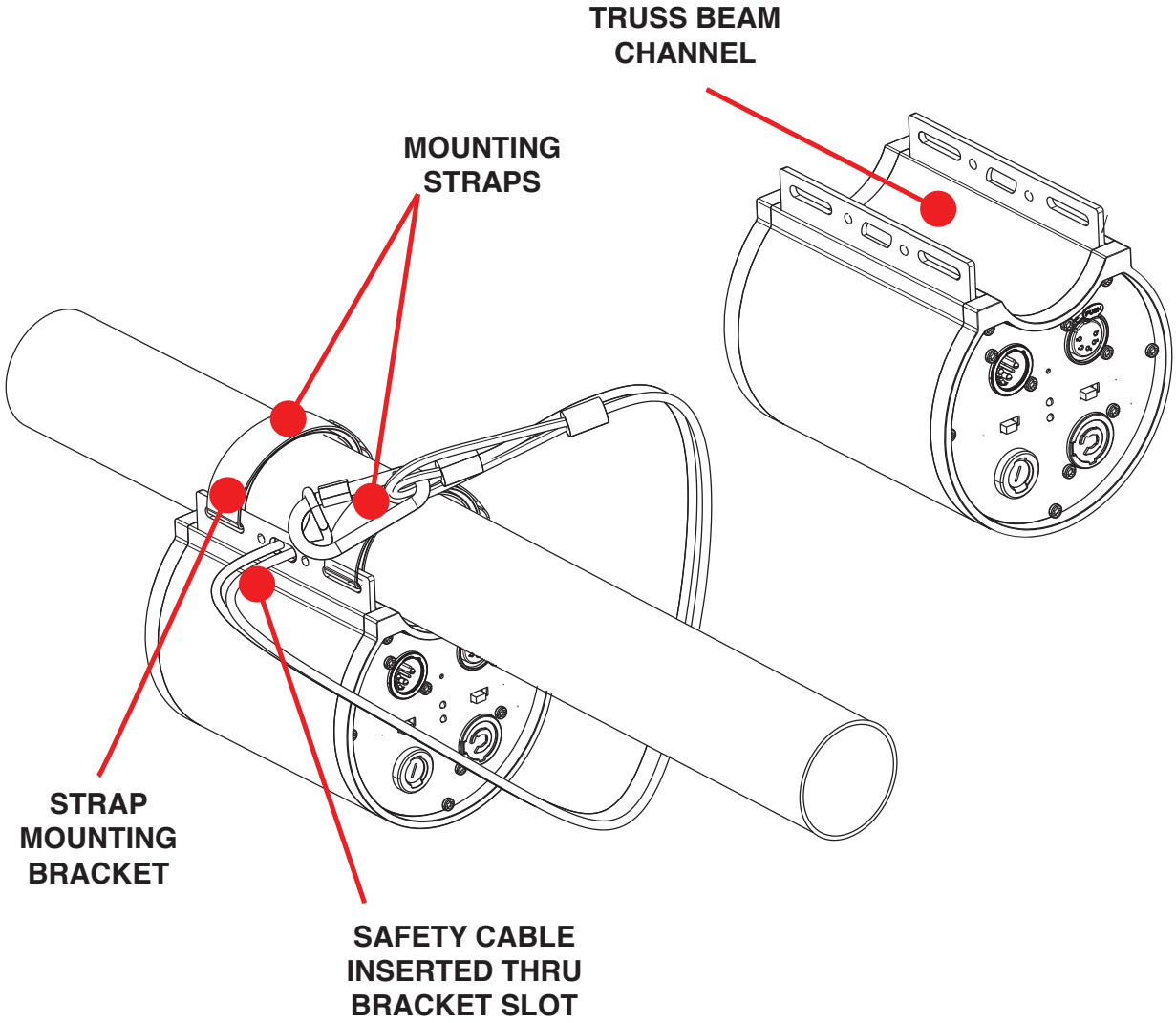

SAFETY CABLE:

ALWAYS ATTACH A SAFETY CABLE WHENEVER INSTALLING THIS FIXTURE IN A SUSPENDED ENVIRONMENT TO ENSURE THAT THE FIXTURE WILL NOT FALL IF THE CLAMP FAILS.

REMOTE DEVICE MANAGEMENT (RDM)

NOTE: In order for RDM to work properly, RDM enabled equipment must be used throughout the entire system, including DMX data splitters and wireless systems.

Remote Device Management (RDM) is a protocol that sits on top of the DMX512 data standard for lighting, and allows the DMX systems of the fixtures to be modified and monitored remotely. This protocol is ideal for instances in which a unit is installed in a location that is not easily accessible.

With RDM, the DMX512 system becomes bi-directional, allowing a compatible RDM enabled controller to send out a signal to devices on the wire, as well as allowing the fixture to respond (known as a GET command). The controller can then use its SET command to modify settings that would typically have to be changed or viewed directly via the unit's display screen, including the DMX Address, DMX Channel Mode, and Temperature Sensors.

FIXTURE RDM INFORMATION:

Device ID	Device Model ID	RDM Code	Personality ID
N/A	N/A	0x1900	N/A

Please be aware that **not all RDM devices support all RDM features,** and therefore it is important to check beforehand to ensure that the equipment that you are considering includes all of the features that you require.

OPERATION

DMX MODE

To activate this mode, move the RDM/DMX Switch to the “DMX” position. The Data Distro 6 will then output the received signal to any devices connected to the six (6) DMX Output ports.

RDM MODE

To activate this mode, move the RDM/DMX Switch to the “RDM” position. The Data Distro 6 will then output the received signal to any devices connected via wireless RDM.

LINK OUT / TERMINATION SWITCH

When this switch is in the “Link Out” position, the Data Distro 6 will also pass signal through the “DMX Thru” port. This signal can be sent to additional Data Distro 6 units by connecting the “DMX Thru” port of the first unit to the “DMX In” port of the next unit in line, as shown in the illustration below. Up to 32 units may be linked together in this way. The final unit in line should have the switch set to the “Terminate” position.

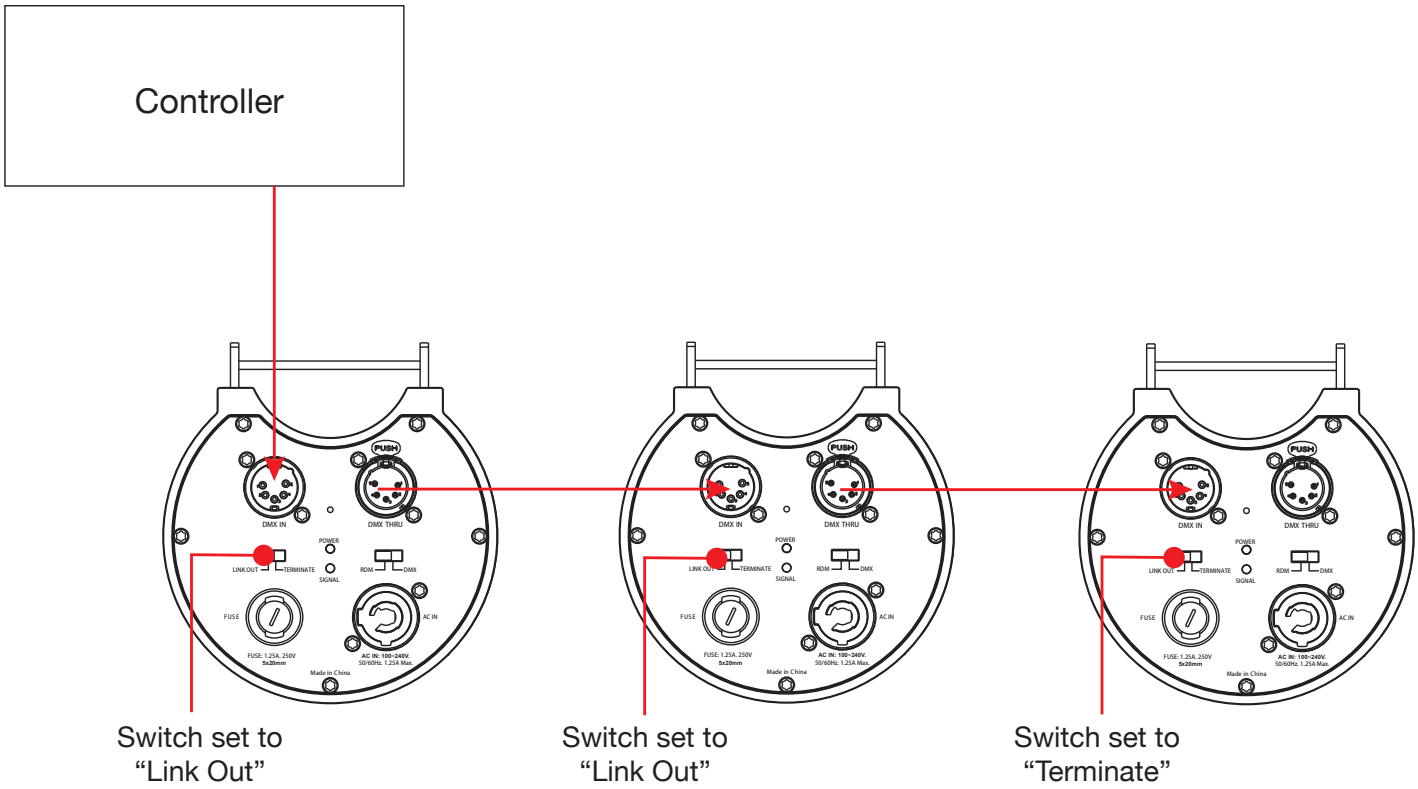

CLEANING AND MAINTENANCE

Due to fog residue, smoke, and dust, cleaning of the external surfaces must be carried out periodically.

- Use normal surface cleaner and a soft cloth to periodically wipe down the outside casing.
- Always be sure to dry all parts completely before plugging the unit back in.

Cleaning frequency depends on the environment in which the device operates (i.e. smoke, fog residue, dust, dew).

FUSE REPLACEMENT

This device features a replaceable fuse located alongside the power outlet on the back side of the device, as shown in the illustration below. When changing the fuse, replace the fuse only with an identical ***T1.25A / 250V*** fuse.

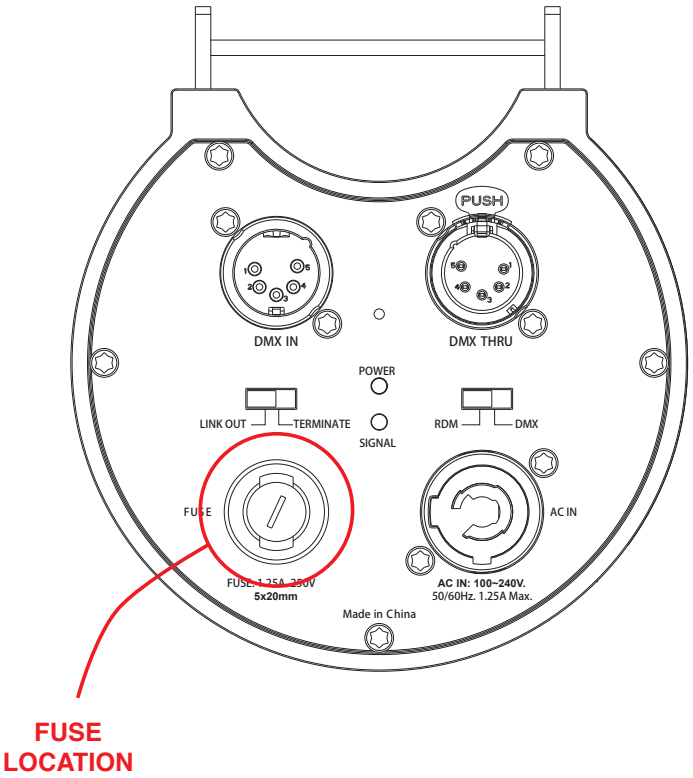

ORDERING INFORMATION

SKU (US)	SKU (EU)	ITEM
DAT600	1321000084	ADJ Data Distro 6

SPECIFICATIONS

Protocols:
- DMX512
- RDM

Physical:
- 1 Truss Mount with Velcro Straps or M10 Screw Clamp (Clamp Not Included)
- 1x Indoor 5pin XLR Input
- 1x Indoor 5pin XLR Thru
- 6x Indoor 5pin XLR Outputs
- Link Out Termination Switch
- DMX / RDM Protocol Switch
- Indoor locking power socket

Dimensions & Weight:
- Length: 4.73” (120mm)
- Width: 5.43” (137.75mm)
- Height: 5.10” (129.55mm)
- Weight: 1.83lbs. (0.83kg)

Power:
- AC Input: 100-230V 50/60Hz
- Power Consumption: 2.7W @ 120V and 2.9W @ 230V
- Power Input Protection: Fuse, T1.25A/250 (5.2x20mm)

Thermal:
- Ambient Operational Temperature: 32°F to 113°F (0°C to 45°C)
- Humidity: <75%
- Storage Temperature: 77°F (25°C)

Certifications & IP Rating:
- CE
- cETLus (Pending)
- FCC
- IP20

IP20

DIMENSIONAL DRAWINGS

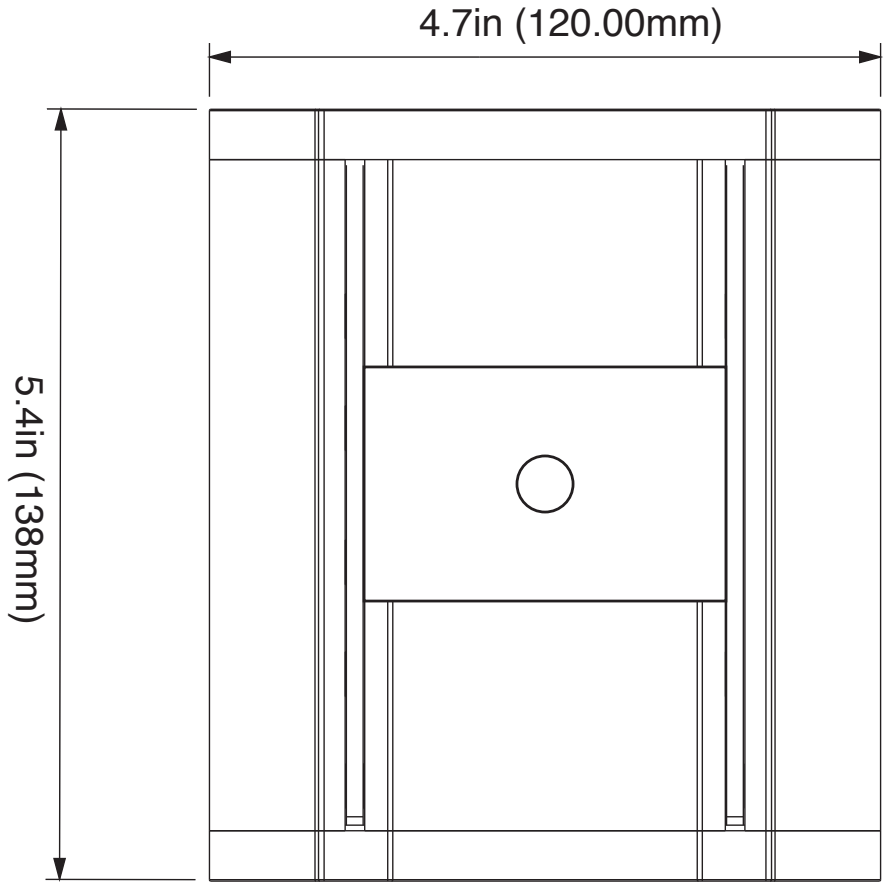

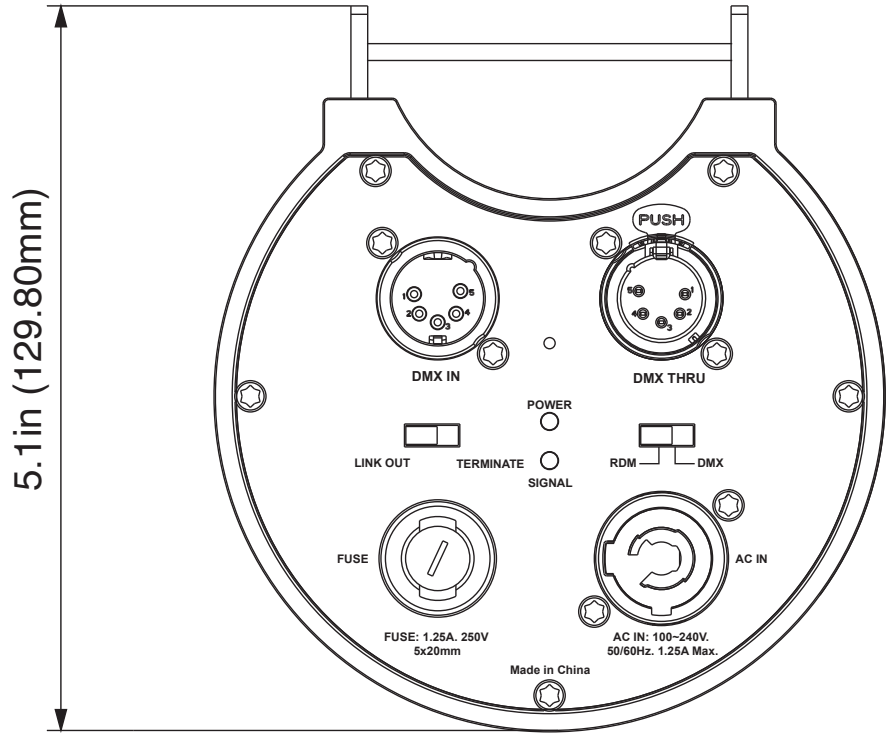

FCC STATEMENT

This device complies with Part 15 of the FCC Rules. Operation is subject to the following two conditions: (1) this device may not cause harmful interference, and (2) this device must accept any interference received, including interference that may cause undesired operation.

FCC RADIO FREQUENCY INTERFERENCE WARNINGS & INSTRUCTIONS

This product has been tested and found to comply with the limits as per Part 15 of the FCC Rules. These limits are designed to provide reasonable protection against harmful interference in a residential installation. This device uses and can radiate radio frequency energy and, if not installed and used in accordance with the included instructions, may cause harmful interference to radio communications. However, there is no guarantee that interference will not occur in a particular installation. If this device does cause harmful interference to radio or television reception, which can be deter- mined by turning the device off and on, the user is encouraged to try to correct the interference by one or more of the following methods:

- Reorient or relocate the device.
- Increase the separation between the device and the receiver.
- Connect the device and the radio receiver to electrical outlets on different electrical circuits.
- Consult the dealer or an experienced radio/TV technician for help.

This page intentionally left blank.