ACTION 500 series

ACTION-525

KEY FEATURES

- Passive two-way system
- Birch plywood enclosure
- Durable ISO-flex paint
- Recommended processor: DSP-226
- Recommended amplifier: PA series

DESCRIPTION

ACTION-525 is a passive system that incorporates two 15" speakers that deliver a greater SPL than the simple 15" plus enhanced bass for events that require both powerful sound and simple adjustment.

As part of our company culture, all our systems are developed under a single philosophy: to deliver the highest possible quality in terms of both materials and overall system design. In the ACTION-500 series we use the same birch plywood as our touring systems for a tight, natural warm sound found nowhere else on the market.

For long-term optimal performance of the ACTION-500 passive versions, the system can only be a complete sound system when rounded out with our amplifiers and processors with stored presets and limiters.

APPLICATIONS

- Live sound reinforcement
- Bands, DJ´s and performers
- Speech and vocals
- Music playback in entertainment
- A/V, conferences and presentations

SPECIFICATIONS

Performance

Frequency Range (-10 dB)	47 Hz – 20 kHz
Horizontal Coverage (-6 dB)	90°
Vertical Coverage	60°
Nominal Impedance	4 ohms
RMS Power Handling	700 W
Peak Power Handling	2800 W
On-axis Sensitivity 1W/1 m	99 dB SPL
Maximum Peak SPL at 1 m	134 dB
Recommended Amplifier	PA-1500
Recommended Processor	DSP-226

Connectors

Audio Input Connector	1 x speakON NL4
Audio Output Connector	1 x speakON NL4

Enclosure

Enclosure Construction	Birch Plywood
Enclosure Geometry	Trapezoidal
Rigging	M10 Rigging Points
Finish	ISO-flex Paint
Color	Black
Depth	515 mm (20,3 in)
Dimensions (H x W x D)	1.090 x 445 x 515 mm 42,9 x 17,5 x 20,3 in

ACTION-525

Net Weight	38,5 kg (84,9 lb)

Components

LF Driver	15MI
HF Driver	M-44
Horn/Waveguide	BC-916

Shipping

Carton Dimensions (H x W x D)	1.165 x 515 x 560 mm 45,9 x 20,3 x 22,1 in
Shipping Weight	41,5 kg (91,5 lb)

ORDERING INFORMATION

Performance

Model	Description	P/N
System		
ACTION-525	2-way Passive Point Source	10427252
Replacement Parts		
15MI	Cone Transducer	10214290
BC-916	Horn	30006590
F-ACT525	Filter	30009294
GM-15MI	Recone Kit	20208270
GM-M44	Diaphragm	20205070
M-44	Compression Driver	10207090
Accessories		
ANL-2	Rigging Accessories	10101020
FUN-VT215	Transport Accessories	10103730
SPK4-1	Electronic Accessories	20502000
SPK4-10	Electronic Accessories	20502001
SPK4-20	Electronic Accessories	20502002
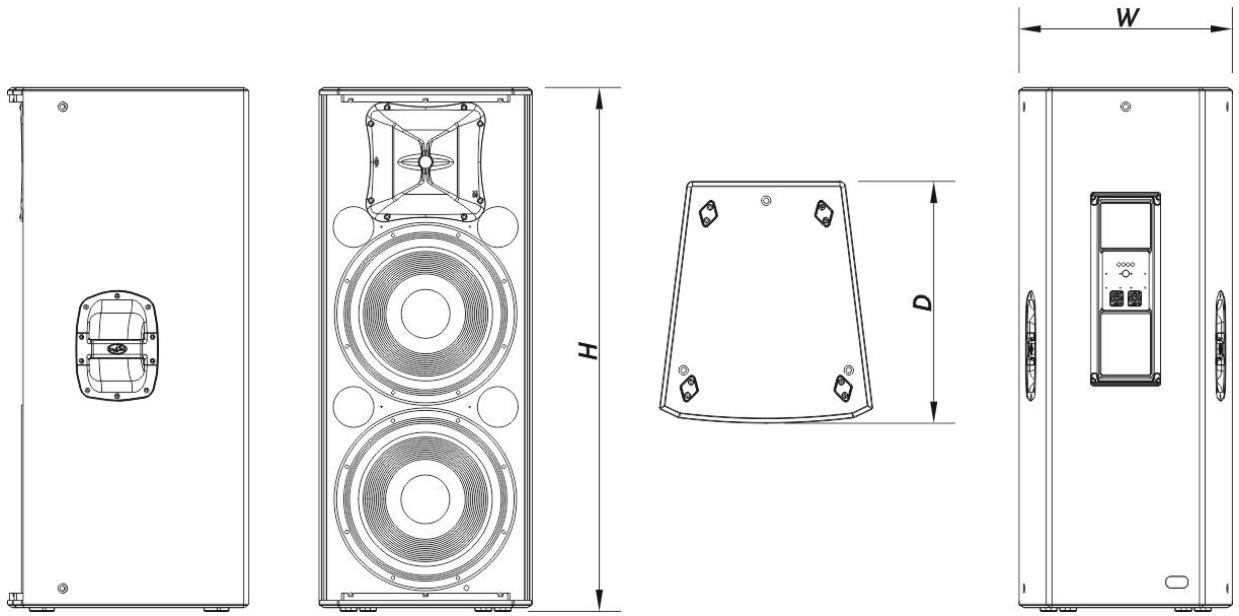
DIMENSIONS