DIGIDESIGN® C|24

ARGOSY

Imagine -
then transform.

FORM AND FUNCTION combine to create the most technologically advanced console furniture solution for your Digidesign® C|24. Powder coated wood and stell components are brought together to give you a solid feel and look with a finish that is as durable as it is beautiful.

Your dream studio
just got closer.

Ph: 573.557.3150 toll free: 800.315.0878

DIGIDESIGN® C|24

MORE THAN a functional space for your control surface and electronics, Argosy's console for the Digidesign® C|24 is an inspirational landscape that inspires and enables you to create your best work.

ACCESSORIES

Mahogany Hardwood Endpanels

Rack Rail Screws

Monitor Arms

Casters

Blank Panels

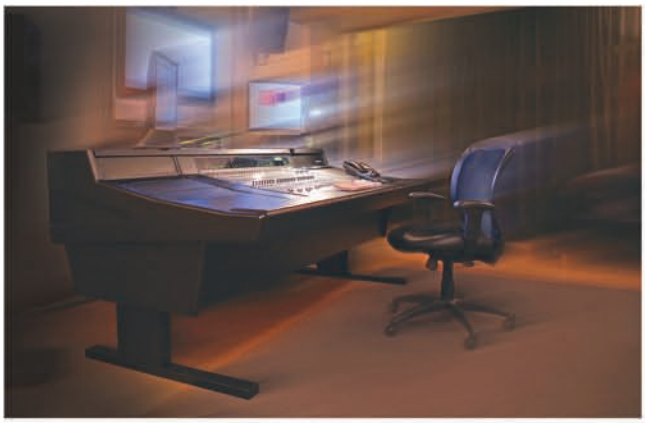

90-2NC24-R

- Precision Fit and Finish
- Powder Coated Components
- Padded Armrest
- Trim Options

NEED A CUSTOMIZED SOLUTION?

Give us a call to discuss what you have in mind, we're happy to help.

WARRANTY

ARGOSY WARRANTS ALL MATERIALS AND WORKMANSHIP TO BE FREE OF DEFECTS FOR A PERIOD OF ONE YEAR.

For more information about our products and services or to see a list of dealers, please vist us at www.argosyconsole.com or call the numbers below.

©2009 ARGOSY CONSOLE, INC. All rights reserved. Argosy is a registered trademark of Argosy Console, Inc. Other trademarked names are the property of their respective owners.

Ph: 573.557.3150 toll free: 800.315.0878

90 Series for C|24

FEATURES AND TECHNICAL SPECIFICATIONS

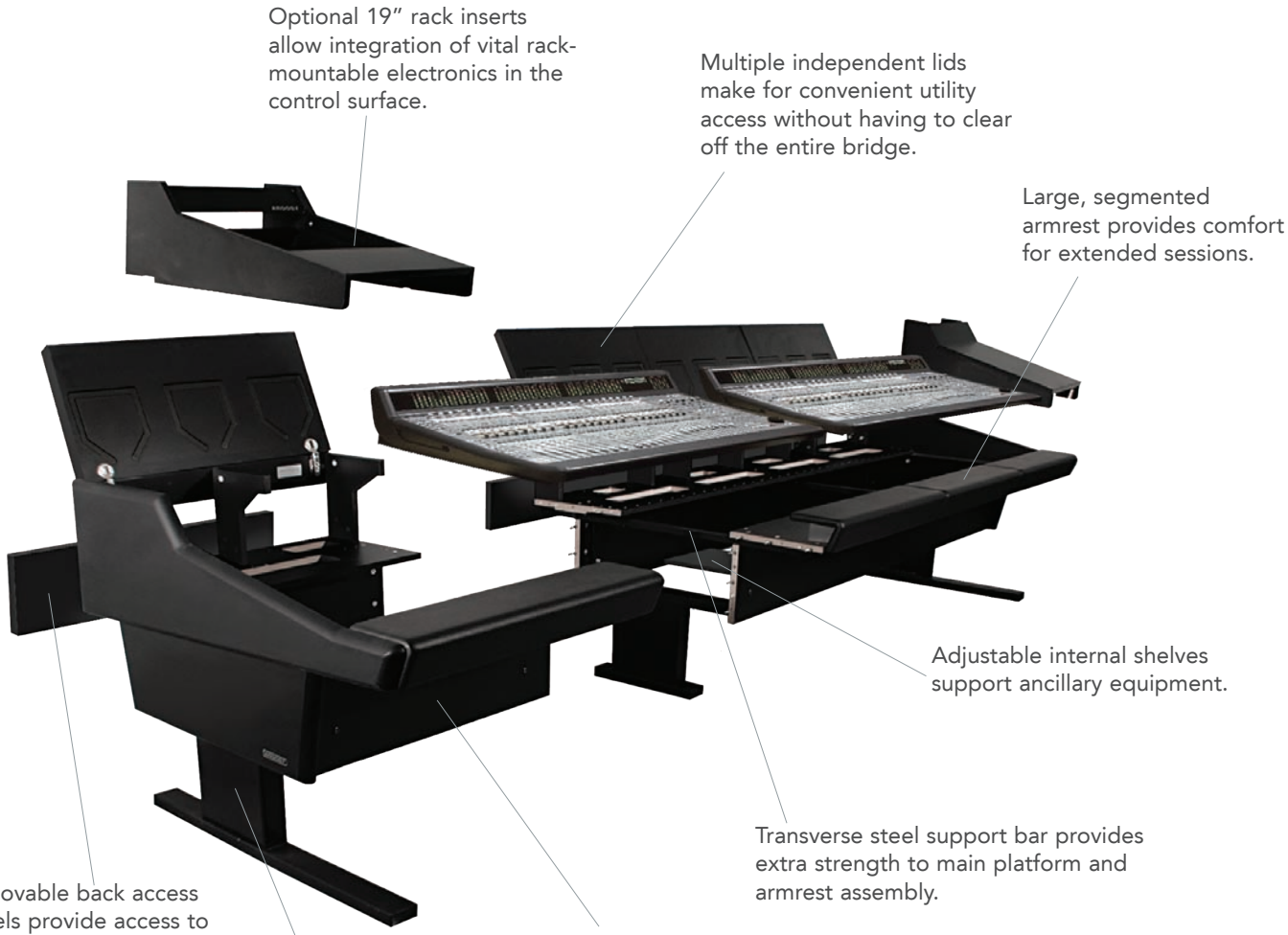

90 Series consoles ship disassembled for easy installation. Each model design is product specific to achieve the best possible fit.

Chassis components are made of 19mm and 32mm MDF to provide strength and durability with minimal acoustical influence.

Open chassis design defeats thermal buildup and permits easy cable access. Enclosed utility area behind meter-bridge separates, conceals, and protects vital gear and cabling.

Detachable lids mounted on adjustable hinges and full-length back access panel provide easy access to utility areas. Multiple cable grommets in back main platform provide convenient cabling access.

Producers desk inserts provide additional workspace and flexibility to accommodate different configurations.

Patented modular expandability allows 90 Series chassis to be configured in width from 7.5' (228.6cm) to 19.6' (598.4cm) in 29.2" (74.2cm) segments.

90 Series for C|24

FEATURES AND TECHNICAL SPECIFICATIONS

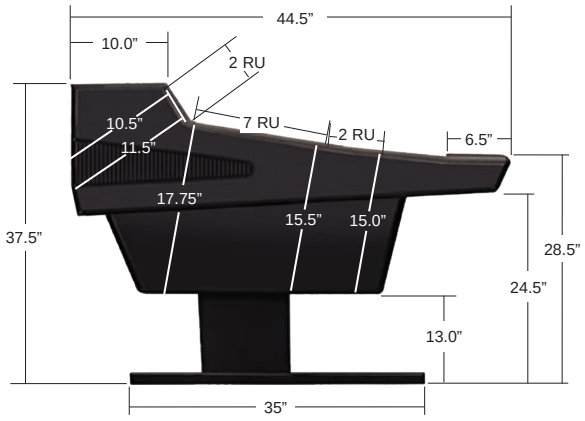

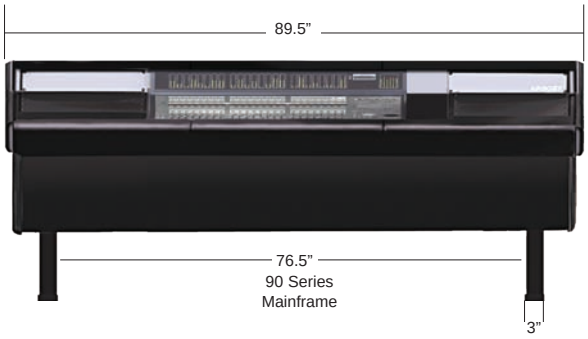

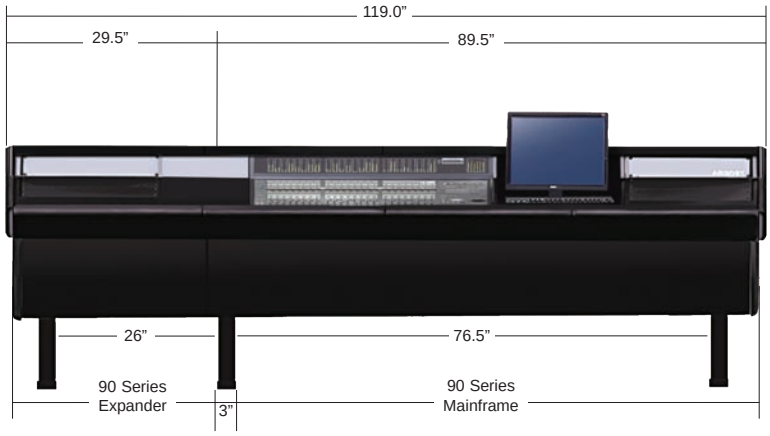

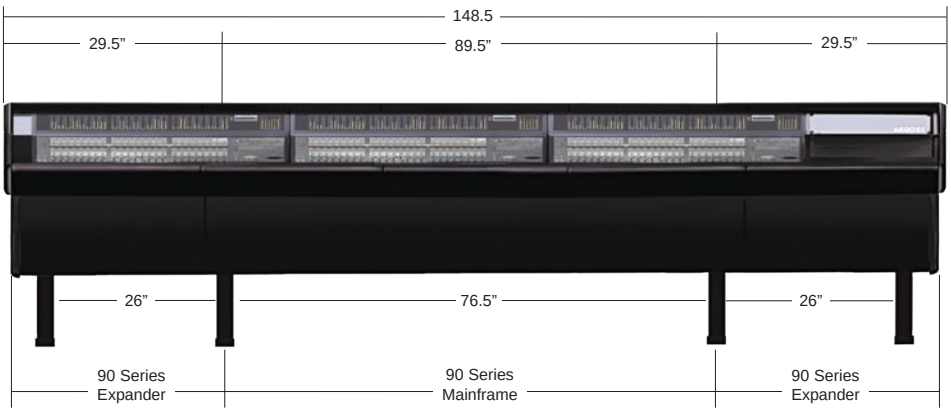

70 Series for C|24

FEATURES AND TECHNICAL SPECIFICATIONS

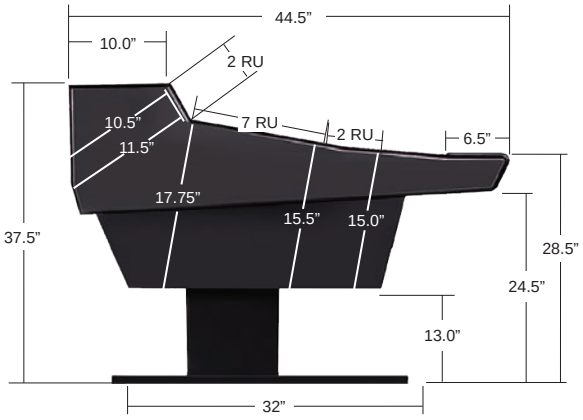

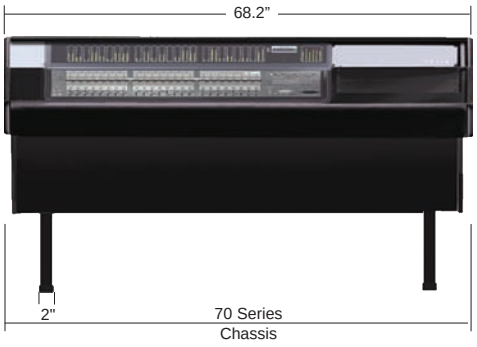

70 Series consoles are shipped disassembled for easy installation. Each model design is product specific to achieve the best possible fit. Chassis components are made of 19mm MDF to provide strength and durability with minimal acoustical influence. Open chassis design defeats thermal buildup and permits easy cable access. Enclosed utility area behind meter-bridge separates, conceals, and protects vital gear and cabling. Detachable lids mounted on adjustable hinges and full-length back access panel provide easy access to utility areas. Multiple cable grommets in back main platform provide convenient cabling access.

*Free shipping within the continental United States.

50 Series for C|24

FEATURES AND TECHNICAL SPECIFICATIONS

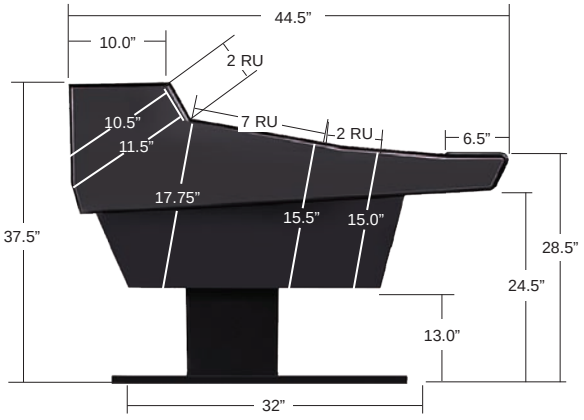

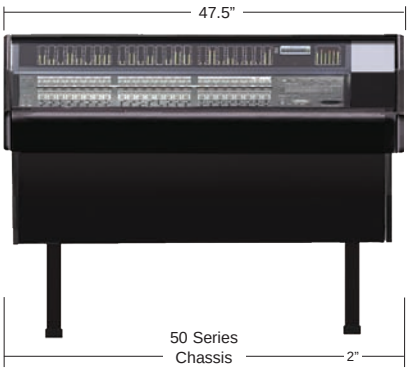

50 Series consoles ship disassembled for easy installation. Each model design is product specific to achieve the best possible fit. Chassis components are made of 19mm MDF to provide strength and durability with minimal acoustical influence. Open chassis design defeats thermal buildup and permits easy cable access. Enclosed utility area behind meter-bridge separates, conceals, and protects vital gear and cabling. Detachable lid mounted on adjustable hinges and full-length back access panel provide easy access to utility areas. Multiple cable grommets in back main platform provide convenient cabling access.

*Free shipping within the continental United States.