Ticket window
Surveillance and security
Conferencing

- Hemispherical polar pattern, excellent intelligibility
- Low frequency roll off to reduce HVAC rumble
- Inconspicuous, resembles a light switch
- Mounts a standard wall plate
- Screw terminal, no need for connectors

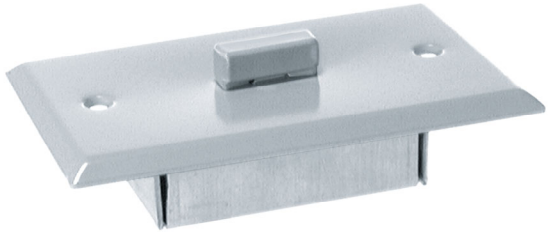

PZM-11

The PZM®-11 is a pressure Zone Microphone® designed for conference-room, security and surveillance applications. It can be mounted in the ceiling or wall in a standard electrical outlet box. Providing excellent intelligibility, the PZM®-11 is designed to look like a light switch so as not to draw attention.

The PZM®-11 has a mic-level output and is powered by 12-48 V phantom power. Like other Pressure Zone Microphones®, the PZM® -11 utilize the Pressure Recording Process™ in which a miniature condenser microphone capsule is mounted very close to a sound reflecting plate or boundary. The capsule is mounted in the “Pressure Zone” just above the boundary, a region where sound coming directly from the sound source combines in-phase with sound reflected off the boundary. The benefits are a wide, smooth frequency response free of phase interference, excellent clarity and “reach,” and consistent pickup anywhere around the microphone.

In the PZM®-11 low frequencies below the voice range are rolled off to reduce pickup of heating, ventilation or air-conditioning rumble (HVAC rumble). The high-frequency response is boosted slightly to aid clarity and articulation.

The microphone connector is a row of screw terminals for easy installation. The output is balanced, low impedance, which allows long cable runs without hum pickup or high-frequency loss.

.

Installation

1. Please locate all the parts shown below.
2. Run a 2-conductor shielded mic cable to the hole where you intend to install the microphone. Install a standard electrical outlet box in the hole. To use phantom power, you need a mixer with phantom power or an external phantom-power supply.
3. Run the mic cable through the hole in the electrical box (if any) and through either hole in the chassis
Service the end of the mic cable.
4. Attach your mic-cable leads to the screw terminals labelled OUTPUT. Connect the mic-cable shield to 1, audio + lead to 2, and audio – lead to 3.
5. Place the chassis over the two long screws. Using the nuts provided, secure the chassis to the faceplate.
6. Using the two screws provided, secure the faceplate to the electrical box or wall board.
7. If you plan to use an XLR-type cable connector: Solder the cable shield to pin 1, audio + lead to pin 2 and audio – lead to pin 3 of the XLR. If you plan to use an RCA or phone connector: Solder the cable shield to the long lug, and solder the audio + lead to the tip or pin. Do not connect the audio – lead because this may reduce the output level in an unbalanced configuration.
8. If the mic cable is run in metal conduit, ground loops can occur that can cause hum. If hum is present after installation, unsolder the chip resistor labelled 000 on the printed-circuit board
9. If you plan to use a cable connector, solder the other end of the mic cable to a 3-pin professional audio connector (XLR-type). Solder the cable shield to pin 1, light-colored lead to pin 2, and darker lead to pin 3.

Dimensions

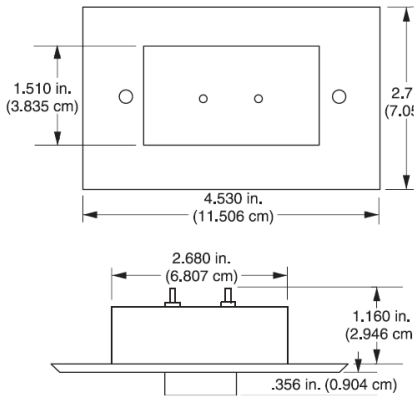

Wiring for Phantom Power

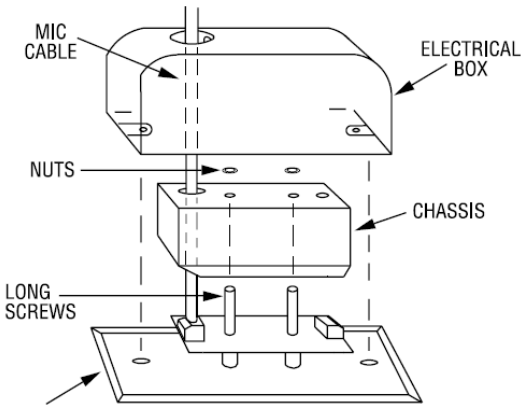

Architects' and Engineers' Specifications

The microphone shall be the Model PZM® -11 or equivalent.
The microphone shall be a Pressure Zone Microphone®, electret-condenser type, with built-in electronics interface. The microphone capsule holder shall be mounted on a standard switch plate. The microphone shall be powered from 12-48 V phantom power.
The output shall be low impedance balanced. Frequency response shall be from 80 Hz to 20,000 Hz. Low frequencies below the voice range shall be rolled off. Open-circuit sensitivity shall be 5 mV/Pa (–46 dB re 1V/Pa). Maximum SPL capability shall be 120 dB SPL at 3% THD. Equivalent noise shall be 26 dBA typical (0 dB = 0,0002 dyne/cm2).
The PZM® -11 microphone is specified.

Specifications:

Polar pattern:	**hemispherical**	
Frequency response:	**80 to 20,000 Hz**	
Impedance:	**225 ohms**	
Equivalent noise level:	**26 dB-A**	
Maximum SPL:	**120 dB**	
Finish:	**off-white; May be painted any color**	
Net weight:	**71 g (2.5 oz.)**	
Item number:	**PCC-11**	**6000H50050**

Fig. 1. Frequency Response

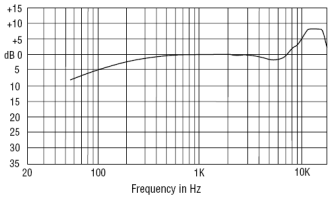

Fig.6. PZM-11 Output Wiring

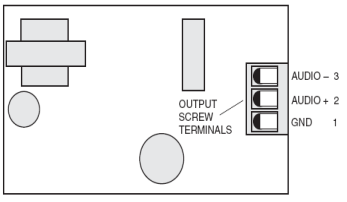

www.akg.com

AKG Acoustics GmbH
Lemböckgasse 21–25, 1230 Vienna /AUSTRIA, phone: + 43 1 86654 0
e-mail: sales@akg.com

AKG Acoustics, U.S.
8400 Balboa Boulevard, Northridge, CA 91329, U.S.A., phone: + 1 818 920 3212
e-mail: akgusa@harman.com

For other products and distributors worldwide visit www.akg.com
Specifications subject to change without notice.

A Harman International Company