EPSON®
EXCEED YOUR VISION

PowerLite® 905 and 915W

MULTIMEDIA PROJECTORS

Ultra bright presentations. Comprehensive connectivity.

Captivate any classroom with ultra bright images from the PowerLite 905 and 915W. These leading-edge performers ensure brilliant presentations in any setting with 3200 lumens of color and white light output for the 915W and 3000 lumens of color and white light output for the 905[1]. The PowerLite 905 and 915W are also equipped with a microphone input and premium 16 W speaker, so students will hear the lesson, without costly speakers or voice strain. Quickly connect the projector to a laptop or Blu-ray® player via HDMI digital input to enhance your presentation with exciting content. Advanced networking capabilities save time and money.

Ultra bright, brilliant presentations
– 3200 lumens color/white light output[1] and WXGA (1280 x 800) resolution (PowerLite 915W)
– 3000 lumens color/white light output[1] and XGA (1024 x 768) resolution (PowerLite 905)

Comprehensive connectivity for today and future teaching scenarios
– HDMI digital connectivity for both audio and brilliant video content with just one cable
– RJ-45 for remote monitoring/control or projecting content over the network

Engage the entire classroom without costly speakers or voice strain — powerful 16 W speaker and built-in microphone input

The best selling projectors #1 Epson Projectors in the world

PowerLite® 905 and 915W MULTIMEDIA PROJECTORS

The best-selling projectors in the world.

Epson understands education and has a solution no matter what your teaching scenario. Built with image quality and reliability in mind, Epson projectors enhance communication and inspire collaboration, while offering a low total cost of ownership. From long-throw projectors designed for traditional educational settings to ultra-short-throw and all-in-one solutions built for progressive classrooms, Epson has the model made for you.

3LCD technology — for quality and color that's beyond amazing

Innovative technology with proven reliability

- 3 chips for full-time, vibrant color
- 25% less electricity required per lumen of brightness when compared to 1-chip DLP projectors[2]
- Over 20 years of road-tested reliability built into every projector

Energy-efficient E-TORL® lamp, exclusively from Epson

- Long lamp life lasts up to 6000 hours[3]
- Minimizes both light diffraction and light leakage
- E-TORL lamps maximize your presentation time, while minimizing your costs

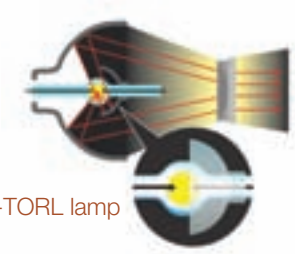

E-TORL lamp

Remarkable widescreen performance (PowerLite 915W only)

Featuring WXGA resolution (1280 x 800, 16:10 aspect ratio), the PowerLite 915W is ideal for use with the latest generation widescreen computers, and great for projecting widescreen content. It gives you:

- 30% more image area than a 4:3 image
- 10% more image area than a 16:9 image

The PowerLite 915W still allows you to display 4:3 and 16:9 content.

SVGA

800 x 600

XGA

1024 x 768

WXGA

1280 x 800

Amazing light output

- 3200 lumens color light output and 3200 lumens white light output[1] (PowerLite 915W)
- 3000 lumens color light output and 3000 lumens white light output[1] (PowerLite 905)
- High color light output for bright, balanced, colorful images
- White light output that's measured using ISO 21118 (a more rigid standard than the outdated ANSI lumens rating used by some competitive products)

PowerLite 915W

PowerLite 905

RJ-45 network connectivity

- Project presentations over the network — transmit both audio and video with a single connection
  - Display images from any networked location, or, in up to 4 different classrooms simultaneously
  - Present remotely to support distance learning applications
  - Connect wirelessly, via a network access point, to promote collaborative sharing and an engaging learning environment

- Easily monitor/control networked Epson projectors remotely, using the RJ-45 connector and EasyMP® Monitor software
  - Save time and maintenance costs — power classroom projectors on and off without having to go to each individual classroom; set schedules for automatic events
  - Receive e-mail alerts when attention is required
  - Crestron RoomView™ enabled — monitor/control your projector with RoomView software, without the need for an A/V control box

Better Products for a Better Future™

For more information on Epson's environmental programs, go to eco.epson.com

Eco Features

- Energy-efficient 3LCD light engine
- Low power consumption of 0.3 W in Standby Mode (communication off)
- Energy-efficient E-TORL lamp
- Designed to be recycled[4]
- Epson America, Inc. is a SmartWay℠ Transport Partner[5]

SmartWay℠ Transport Partner
Getting There With Cleaner Air

High-quality images with HDMI digital connectivity

- Delivers both audio and brilliant video content with just one cable
- Compatible with the latest laptops, Blu-ray and media players

Advanced 3-in-1 USB Plug 'n Play instant setup — for PC and Mac®

- Three features, all with one standard USB connection — display your presentation, transmit audio and control your presentation

Built-in closed captioning

- Essential for education — helps meet ADA508 requirements for students with hearing impairments
- Helps save money — no need to pay for an additional decoder and its installation

Fast, easy setup and control

- 1.6x optical zoom gives you the flexibility to adjust your presentation to suit your space and audience, without sacrificing image quality
- Direct Power On/Off — power the projector on and off with the flip of a light switch
- Instant Off® — no cool-down time required, so it's ready to shut down when you are
- A/V Mute — control your presentation using the remote or by closing the slide; it's right at your fingertips

Horizontal keystone correction

- +/-30 degrees provides the ultimate projector placement flexibility
- Allows for off-center positioning of the projector, and still have a correctly proportioned image

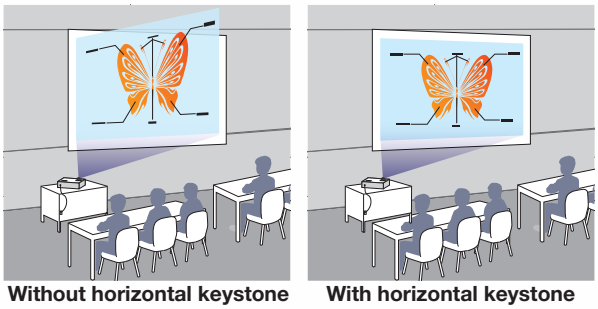

Without horizontal keystone | With horizontal keystone

Quick Corner®

- This innovative feature allows you to move any of the four corners of an image independently, to adjust each corner for a perfectly rectangular picture

Additional Features

- **Versatile connectivity for the classroom — HDMI, USB, audio out, monitor out, computer/VGA inputs, LAN and RS-232c**
- **Wireless capabilities — via the optional wireless module with either:**
  - **Included software (Mac and PC) or**
  - **Optional Quick Wireless Connection USB key for fast ad hoc wireless connectivity (PC only)**
- **Broadcast your messages — advertise events or broadcast instructions to all networked Epson projectors[6]**
- **Virtual projector remote control on your computer — controls networked projectors via a web browser; Mac and PC compatible**
- **New high-density filter — twice the surface area of our previous generation adds a higher level of protection**

Built-in 16 W speaker and microphone input

- **Captivate your entire classroom with 16 W of powerful sound — without purchasing costly speakers or straining the teacher's voice**

Expanded USB functionality

- **Partner your projector directly with the Epson DC-06 document camera**
- **Deliver PC-free slideshows using a USB flashdrive (supports multiple file formats — JPEG, PNG, GIF and BMP)**

Built-in teaching aids save time

- **Choose from four pre-set templates or create a custom template to project lines or grids onto whiteboards or chalkboards**
- **Simply display the pattern by using the customizable User button on the projector remote control**

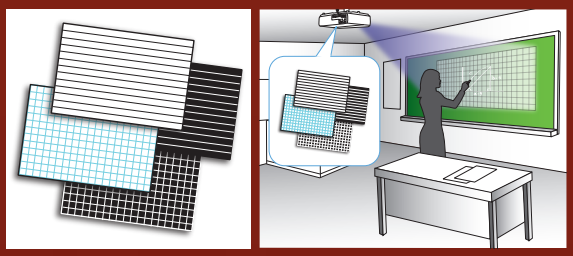

Easily project lines or grids with built-in templates

EPSON®
EXCEED YOUR VISION

PowerLite® 905 and 915W

Multimedia Projectors

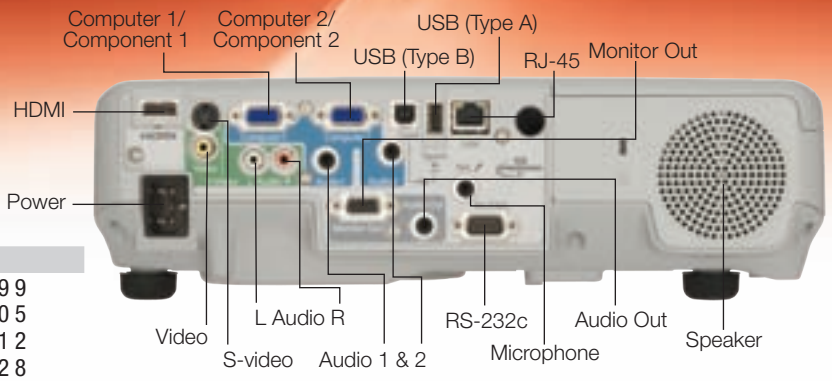

Product Name	Product Code	UPC
PowerLite 905 projector	V11H387020	0 10343 88039 9
PowerLite 915W projector	V11H388020	0 10343 88040 5
Genuine Epson lamp (905 only)	V13H010L60	0 10343 88041 2
Genuine Epson lamp (915W only)	V13H010L61	0 10343 88052 8
Replacement air filter	V13H134A29	0 10343 88051 1

Specifications

Projection System
Epson 3LCD, 3-chip technology

Projection Method
Front/rear/ceiling mount

Driving Method
Epson Poly-silicon TFT Active Matrix

Pixel Number
905: 786,432 dots (1024 x 768) x 3
915W: 1,024,000 dots (1280 x 800) x 3

Color Light Output[1]
905: 3000 lumens
915W: 3200 lumens

White Light Output[1]
905: 3000 lumens (ISO 21118 standard)
915W: 3200 lumens (ISO 21118 standard)

Aspect Ratio
905: 4:3
915W: 16:10

Native Resolution
905: 1024 x 768 (XGA)
915W: 1280 x 800 (WXGA)

Resize
640 x 480 (VGA), 800 x 600 (SVGA), 1024 x 768 (XGA/915W only), 1152 x 864 (SXGA), 1280 x 800 (WXGA/905 only), 1280 x 960 (SXGA2), 1280 x 1024 (SXGA3), 1280 x 768 (WXGA 60-1/905 only), 1360 x 768 (WXGA 60-2), 1440 x 900 (WXGA+), 1400 x 1050 (SXGA+), 1600 x 1200 (UXGA)

Lamp Type
905: 200 W UHE (E-TORL)
915W: 230 W UHE (E-TORL)

Lamp Life[3]
905/915W: Up to 6000 hours (ECO Mode)
905: Up to 5000 hours (Normal Mode)
915W: Up to 4000 hours (Normal Mode)

Throw Ratio Range
1.38 – 2.24

Size (projected distance)
905: 30" to 300" (0.84 to 8.4 m)
915W: 29" to 280" (0.84 to 8.4 m)

Keystone Correction Automatic
Vertical ± 30 degrees

Keystone Correction Manual
Horizontal ± 30 degrees

Mac Connectivity
Projector is Mac compatible via USB, DVI to HDMI or VGA adapter (not included)

Contrast Ratio
Up to 2000:1

Color Reproduction
16.77 million colors

Projection Lens

Type
Manual optical zoom/Manual focus

F-number
1.51 – 1.99

Focal Length
18.2 mm – 29.2 mm

Zoom Ratio
Optical zoom 1.0 – 1.6

Other

Display Performance
NTSC: 480 lines
PAL: 576 lines
(Depends on observation of the multi-burst pattern)

Input Signal
NTSC/NTSC4.43/PAL/M-PAL/N-PAL/PAL60/SECAM

Interfaces
Computer/component video: D-sub 15 pin x 2
S-video: Mini DIN x 1
Composite video: RCA (Yellow) x 1
Audio in: RCA x 1 (L and R), Mini stereo x 2
USB connector: Type B x 1
(USB display, audio and mouse control)
USB connector: Type A x 1
(USB memory/document camera)
HDMI x 1
RJ-45 x 1
Serial: RS-232c x 1
Monitor out: D-sub 15 pin x 1
Audio out: Mini stereo x 1
Microphone: Mini stereo x 1
Wireless LAN port: 802.11 b/g/n
(optional – module sold separately)

Speaker
16 W (mono)

Operating Temperature
41 ˚ to 95 ˚F (5 ˚ to 35 ˚C)

Power Supply Voltage
100 – 240 V ± 10%, 50/60 Hz

Power Consumption
905: 313 W
915W: 355 W
0.3 W Standby (communication off)

Fan Noise
905: 33 dB (Normal Mode) / 28 dB (ECO Mode)
915W: 37 dB (Normal Mode) / 29 dB (ECO Mode)

Security
Kensington®-style lock provision
Padlock and security cable hole
Password protect function

Dimensions (W x D x H)

Including feet: 13.6" x 10.3" x 4.2"
Excluding feet: 13.6" x 10.3" x 3.7"

Weight
7.4 lb

Remote Control

Features
Source search, video, LAN, computer, USB, power, aspect, color mode, volume, e-zoom, A/V mute, freeze, menu, page up and down, help, auto, mouse functions, user, esc

Operating Angle
Right/left: ± 30 degrees
Upper/lower: ± 30 degrees

Operating Distance
19' (6 m)

Support

The Epson ConnectionSM
Pre-sales support
U.S. and Canada 800-463-7766
Internet website www.epson.com

Service Programs
Two-year projector limited warranty, Epson Road Service program, PrivateLine® dedicated toll-free support and 90-day limited lamp warranty

What's In The Box
PowerLite 905 or 915W projector, power cord, computer cable (VGA), projector remote control, batteries, user manual CD, projector software CD, Quick Setup Sheet, PrivateLine support card, and password protection sticker

Accessory Part Numbers

Genuine Epson lamp (905 only)	V13H010L60
Genuine Epson lamp (915W only)	V13H010L61
Replacement air filter	V13H134A29
Wireless LAN unit (ELPAP07)	V12H418P12
Quick wireless connection USB key (ELPAP08)	V12H005M08
Epson DC-06 document camera (ELPDC06)	V12H321005
Epson DC-10s document camera	ELPDC10S
Epson DC-11 document camera (ELPDC11)	V12H377020
AP-60 projector sound solution	V12H329020
Universal projector ceiling mount	ELPMBPJF
Adjustable suspended ceiling channel kit	ELPMBP01
False ceiling plate kit	ELPMBP02
Structural round ceiling plate	ELPMBP03
Adjustable extension column (pipe) 8"-11"	ELPMBC01
Component to VGA cable	ELPKC19
Kensington security lock	ELPSL01
Soft carrying case (ELPKS64)	V12H001K64
50" portable screen	ELPSC06
Duet™ screen	ELPSC80
ES3000 portable screen (ELPSC26H)	V12H002S3Y
BrightLink Solo™ interactive module (IU-01)	V12H415020
BrightLink Solo interactive module with RM Easiteach (IU-01)	V12H415020RM
Replacement remote control	1519442
PixiePlus™ control system	ELPSP10

Packaging Specifications

PowerLite 905/915W
Dimensions: 19.1" x 14.1" x 6.7" (W x D x H)
Weight:
905: 11.2 lb
915W: 11.3 lb

Genuine Epson Lamp
Dimensions: 6.3" x 5.6" x 5.6" (W x D x H)
Weight: 0.7 lb
Master Carton
Dimensions: 28.4" x 13.1" x 6.8" (W x D x H)
Weight: 9.5 lb
Units Per Master Carton: 10

Replacement Air Filter
Dimensions: 4.9" x 3.9" x 1.2" (W x D x H)
Weight: 0.1 lb
Master Carton
Dimensions: 12.7" x 5.2" x 4.6" (W x D x H)
Weight: 1.1 lb
Units Per Master Carton: 10

1 Color and white light output will vary depending on mode selected. White light output measured using ISO 21118 standard.
2 Data source: ProjectorCentral.com, Jan. 2011. Average of 1038 shipping models for which the manufacturers provided lumens and total power data, all resolutions and brightness levels.
3 Lamp life will vary depending upon mode selected, environmental conditions and usage. Lamp brightness decreases over time.
4 See our website for convenient and reasonable recycling options at www.epson.com/recycle
5 SmartWay is an innovative partnership of the U.S. Environmental Protection Agency that reduces greenhouse gases and other air pollutants and improves fuel efficiency.
6 Works only with Epson projectors that support presentation over the network capability.

Epson America, Inc.
3840 Kilroy Airport Way, Long Beach, CA 90806

Epson Canada Limited
185 Renfrew Drive, Markham, Ontario L3R 6G3

www.epson.com
www.epson.ca

Specifications and terms are subject to change without notice. Epson, EasyMP, E-TORL, Instant Off and Quick Corner are registered trademarks, Epson Exceed Your Vision is a registered logomark and Better Products for a Better Future is a trademark of Seiko Epson Corporation. PowerLite and PrivateLine are registered trademarks, BrightLink Solo and Duet are trademarks and Epson Connection is a service mark of Epson America, Inc. SmartWay is a service mark of the U.S. Environmental Protection Agency. All other product and brand names are trademarks and/or registered trademarks of their respective companies. Epson disclaims any and all rights in these marks. Copyright 2011 Epson America, Inc. CPD-33445R1 3/11