DC 8 Way Splitter

GANTOM GOCABLE

Gantom GoCable premium indoor power and data cables makes wiring Gantom fixtures fast and easy. Various lengths of extensions and splitters make placing any connection exactly where you need it a simple task. Extra-tight connector fit and heavy duty reinforced materials mean your connections stay exactly where you want them. For a premium indoor wiring experience choose Gantom GoCable!

*For dry environments only.

2.1mm DC Connectors

FEATURES (DC)

- ☑ 16AWG heavy duty cables
- ☑ Extra tight 2.1mm DC connectors for strong connections
- ☑ Easy to use

SPECIFICATIONS (DC)

GAUGE	16AWG
CONDUCTOR	2 Conductor
CONNECTION	2.1mm ID/5.5mm OD DC jack

3.5mm TRS Connectors

FEATURES (TRS)

- ☑ 18AWG hHeavy duty cables
- ☑ Extra tight 3.5mm TRS connectors for strong connections
- ☑ Shielded
- ☑ Easy to use

SPECIFICATIONS (TRS)

GAUGE	18AWG
CONDUCTOR	3 Conductor
CONNECTION	3.5mm TRS jack

SKU NUMBER (DC)

DC 2m Extension	CB11
DC 5m Extension	CB12
DC 2 Way Splitter	CB20
DC 4 Way Splitter	CB21
DC 8 Way Splitter	CB22

SKU NUMBER (TRS)

TRS 2m Male to Male	CB31
TRS 5m Male to Male	CB32
TRS Coupler	CB41
TRS 2 Way Splitter	CB42
XLR to TRS Adapter	CB51

Address: 28358 Constellation Road Unit 670, Valencia, CA 91355 **Phone:** 661-347-0779 **Fax:** 661-793-6985 **Email:** info@gantom.com

www.gantom.com

CB11/CB12

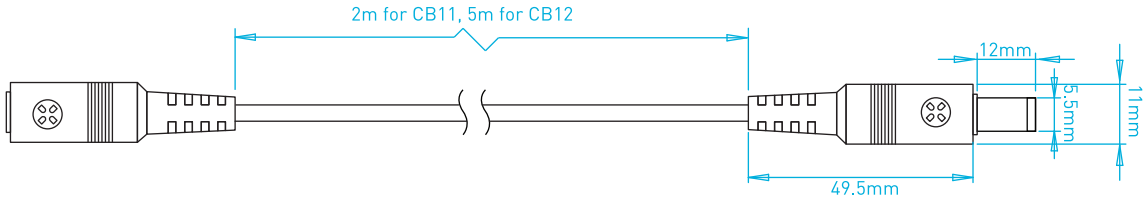

CB21

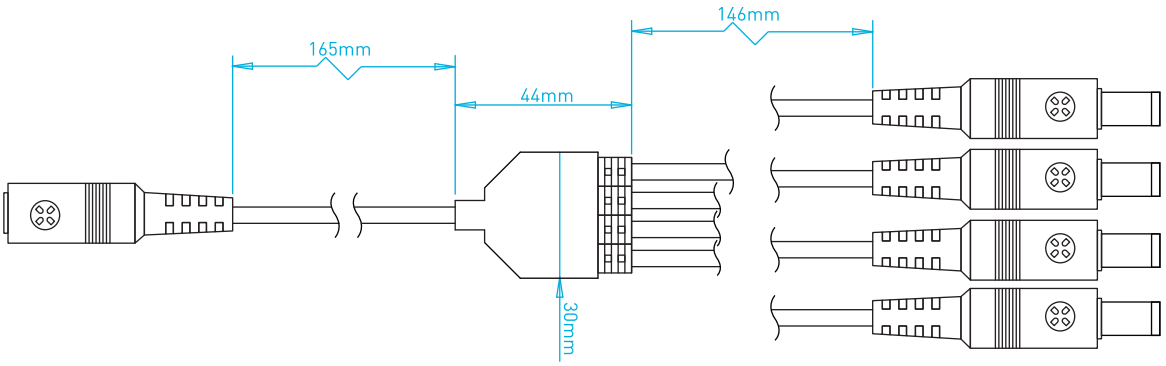

CB22

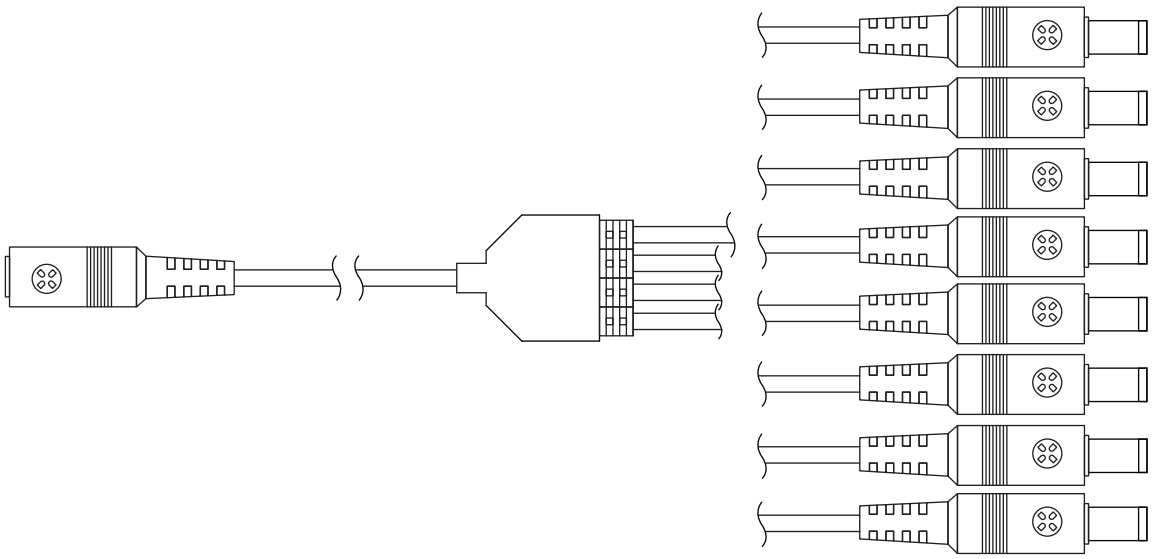

CB20

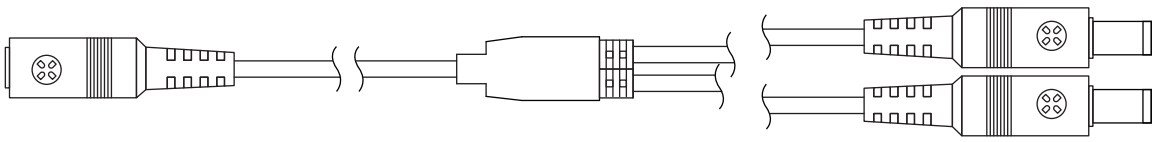

Address: 28358 Constellation Road Unit 670, Valencia, CA 91355 **Phone:** 661-347-0779 **Fax:** 661-793-6985 **Email:** info@gantom.com **www.gantom.com**

CB31/CB32

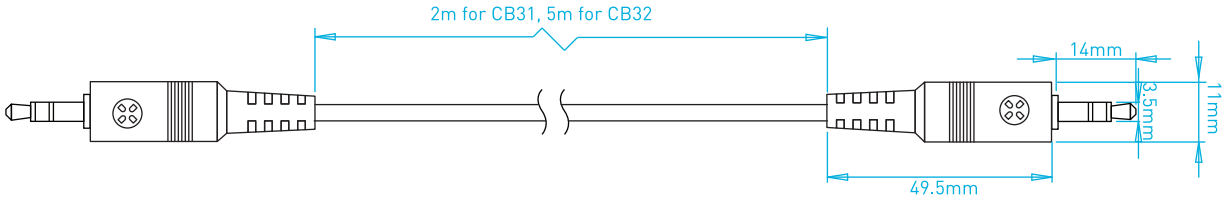

CB41

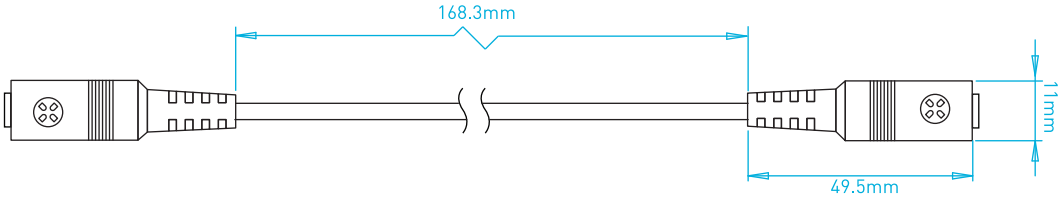

CB42

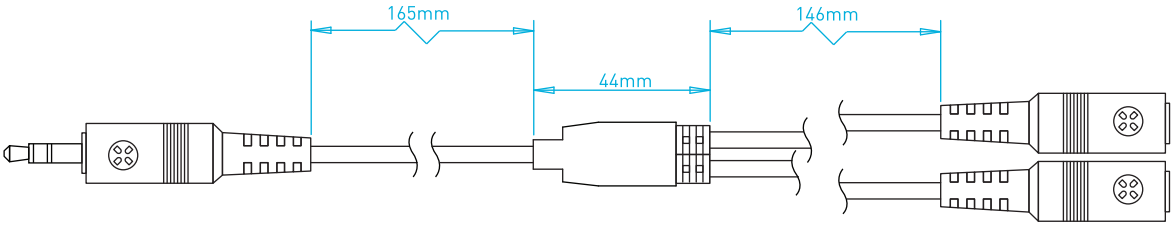

CB51

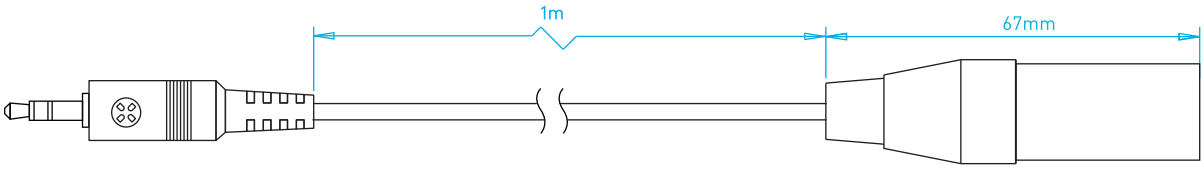

Address: 28358 Constellation Road Unit 670, Valencia, CA 91355 **Phone:** 661-347-0779 **Fax:** 661-793-6985 **Email:** info@gantom.com **www.gantom.com**

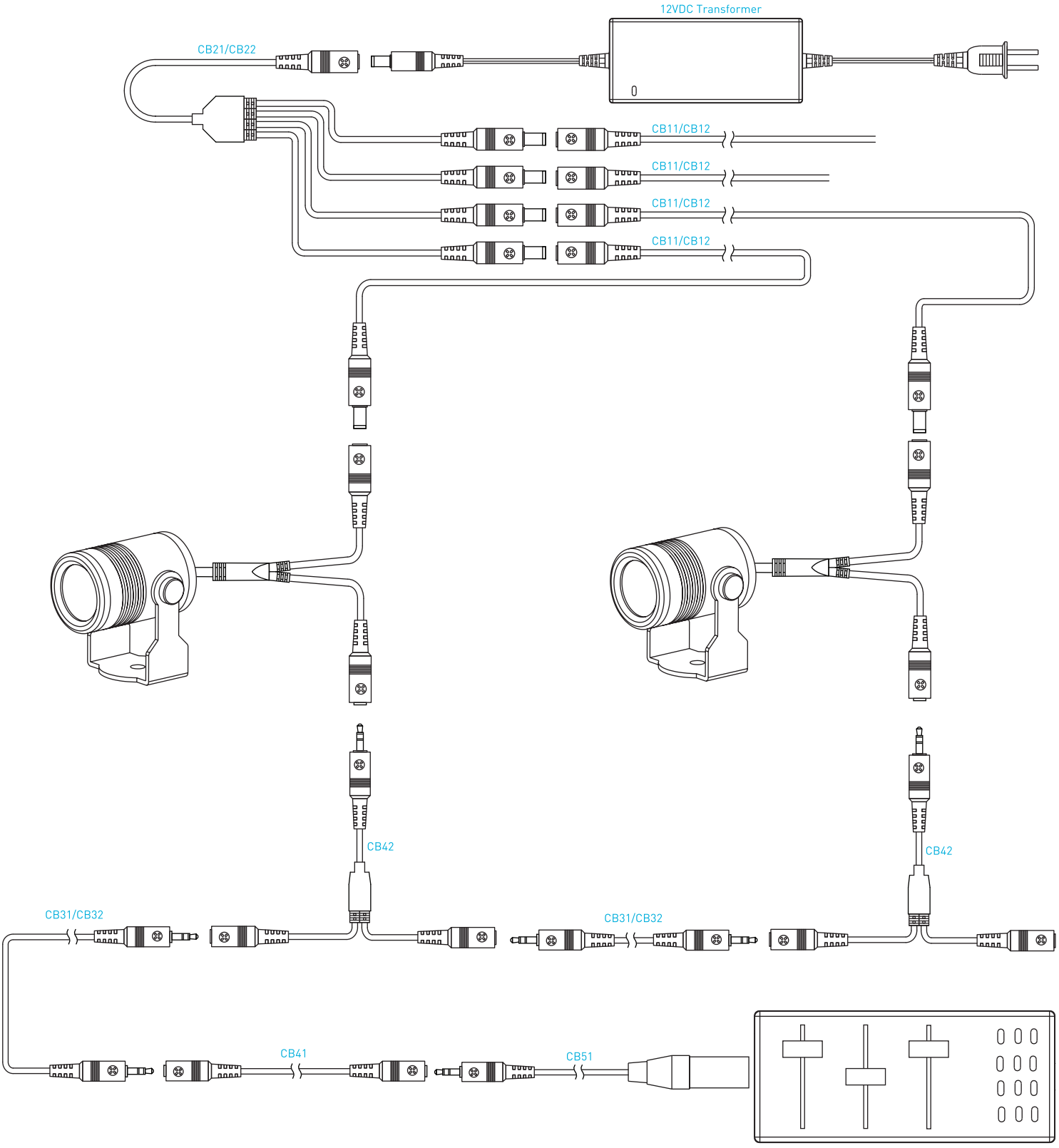

Address: 28358 Constellation Road Unit 670, Valencia, CA 91355 **Phone:** 661-347-0779 **Fax:** 661-793-6985 **Email:** info@gantom.com

www.gantom.com