ADVANCED NETWORK DEVICES

IPSWS-FM

Standard Flush- Mount IP Speaker

IPSWS-FM (Approx. 12”x 12”)
(Standard mount available)

IP Speaker Overview

Advanced Network Device’s (AND) IP Speaker is a Power over Ethernet (PoE, PoE+) loudspeaker that requires only an RJ-45 connector to connect to existing data networks. Simultaneously, you can broadcast to both phones and speakers. Also, there is a built in microphone for two way communications.

Features

Built in Web Server:
- Configurable volume
- Device Status
- Field upgradable

Line In/ Out:
- Independent line-in.
- Can be configured to send line in audio to the speaker and/or broadcast to additional speakers

Easy Installation:
- Only requires CAT 5 connection (up to 300ft) to network
- Power over Ethernet (no power cord or adapter). No other equipment needed

GPIO:
- 2 inputs, 1 output
- Activate via telephone or programmatically

Multicast:
- Full multicast and broadcast support. Send audio and/or scrolling text to individual, multiple, or all devices simultaneously.

Sound Masking:
- Generate configurable pink noise via push button or programmatically for sound masking

Two Way Communication:
- Activate via push button
- Allows for full duplex hands free communication

Options

- Optional button for hands-free push to talk

Advanced Network Devices • 3820 Ventura Dr. Arlington Hts. IL 60004 • Phone: 847-463-2236 • Fax: 847-359-5418
Website: www.anetd.com • E-Mail: sales@anetd.com

IPspeaker

IPspeaker

Supported Protocols

- SIP
- IPv4
- HTTP
- SLP
- TFTP
- NTP
- SNMPV1 & SNMPV2c
- DHCP
- IGMP
- ICMP
- TCP/IP
- UDP
- MDNS and MDNS-SD

Specifications

- Weight: 9lbs
- Approx: 12”x 12”
- PoE (IEEE802.3af) 15.4 W or
- PoE+ (IEEE802.3at) 30.0 W
- 8W total audio output power
- 10/100 Mb network connection

Speaker Size	8”
Average Sensitivity	95dB, 1W/1M
Audio Power	8 W / 16 W
Frequency Response	60 Hz - 17 kHz
Polar Plot	See diagram 1

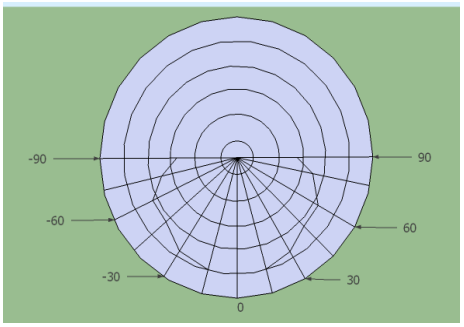

Diagram 1
8” Speaker Polar Plot
2 kHz Octave Band,
Grid Spacing = 6dB/Division

Software Options

- **AND Clockwise**: Instantly finds all of your AND devices, it is a clock/alarm program for scheduling, alarms, events, stopwatch, timer, optional theme sound library, sending News/RSS/Twitter/Weather/Stock feeds, etc.
- **Third Party Software**: AND has a long-standing relationship with InformaCast (SingleWire), and also supports IPSession (IPCelerate), SA-Announce (Syn-Apps), MessageNet Systems, BellCommander (AcroVista), and others. AND devices will also work with SIP-compatible products/PBX, such as Asterisk, 3CX, Shoretel, etc.
- **Multiple**: Can run Clockwise and 3rd party software concurrently.

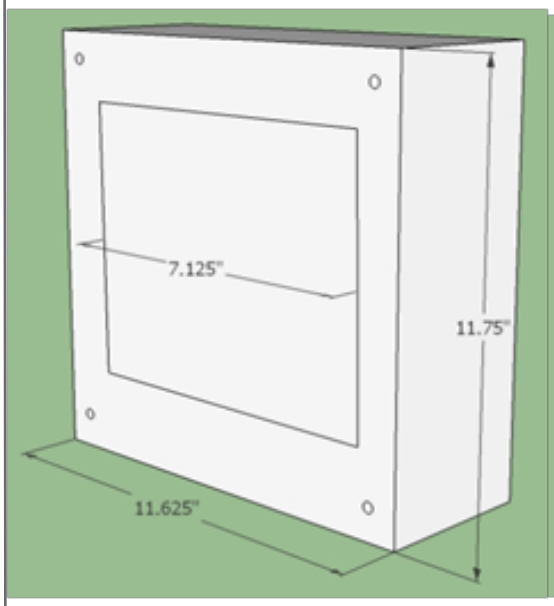

Front

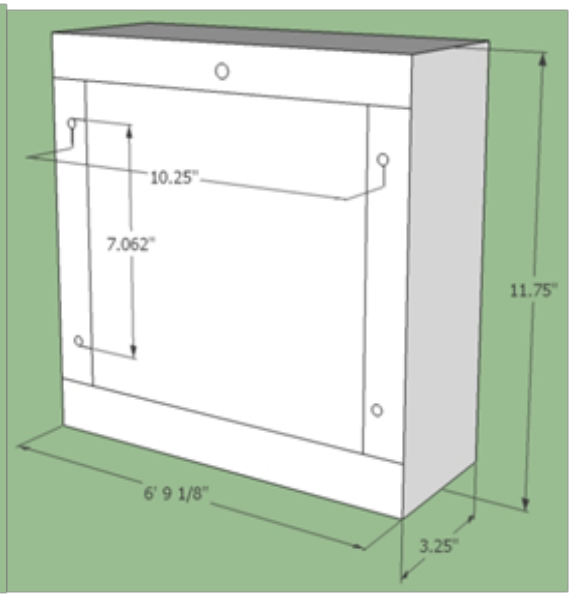

Back

Advanced Network Devices • 3820 Ventura Dr. Arlington Hts. IL 60004 • Phone: 847-463-2236 • Fax: 847-359-5418
Website: www.anetd.com • E-Mail: sales@anetd.com

Designed and Made in the USA

POWERED BY DDC DIGITAL DESIGN CORPORATION